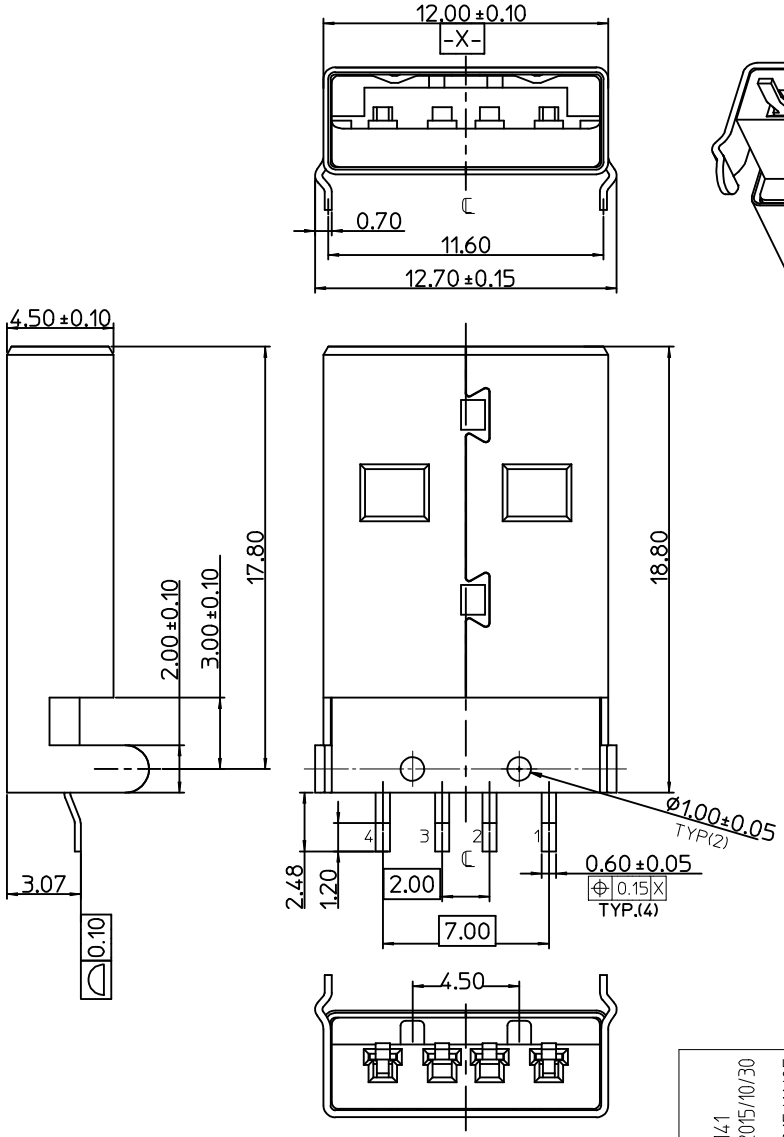

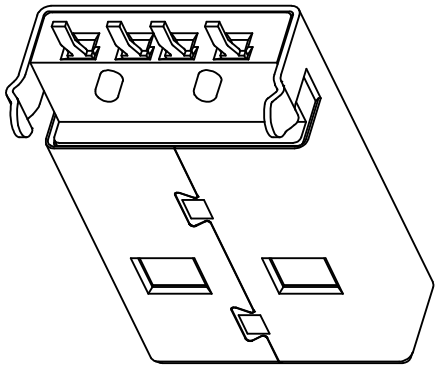

NOTES:
1. MATERIAL:
SHELL: SPCC,
HOUSING: THERMOPLASTIC GLASS FIBER FILLED.
UL94V-0, COLOR: BLACK.
CONTACT: BRASS
2. PLATING:
TERMINAL:
CONTACT AREA: GOLD(Au)
THICKNESS=30 MICROINCH MINIMUM.
SOLDER TAIL: TIN(Sn), ALLOY.
THICKNESS=120 MICROINCH MINIMUM.
UNDER PLATED: NICKEL(Ni), THICKNESS=50 MICROINCH MINIMUM.
METAL SHELL:
NICKEL(Ni). THICKNESS=120 MICROINCH MINIMUM.
UNDER PLATE: COPPER(Cu), THICKNESS=50 MICROINCH MINIMUN.
3. RECOMMENDED PCB THICKNESS: 1.20~1.60mm
4. PRODUCT SPECIFICATION: REFERS TO PS-48037-001
5. PACKAGE SPECIFICATION: SEE TABLE
6. TEST SUMMARY: REFERS TO TS-48037-001

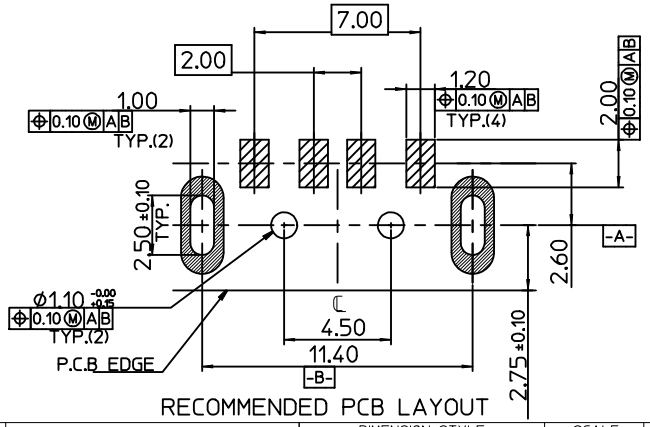

RECOMMENDED PCB LAYOUT

MOLEX P/N	PACKAGE	PACKAGE SPEC
48037-2000	T&R	PK-48037-200
48037-1000	TRAY	PK-48037-001

REVISE			
EC NO:	SH2016-0141		
DRWN:	FYANG05	2015/10/30	
CHKD:			
APPR:	RZHANG	2015/11/05	
REV	D	DESCRIPTION	

QUALITY SYMBOLS: F_A=0, F_C=0, F_P=0

GENERAL TOLERANCES (UNLESS SPECIFIED)

	mm	INCH
4 PLACES	± ---	± ---
3 PLACES	± ---	± ---
2 PLACES	± 0.25	± ---
1 PLACE	± 0.25	± ---
ANGULAR ± 3 °		

DRAFT WHERE APPLICABLE MUST REMAIN WITHIN DIMENSIONS

DIMENSION STYLE: MM ONLY
SCALE: 1:1
DESIGN UNITS
THIRD ANGLE PROJECTION

DRAWN BY: COLIN DUANG DATE: 2003/08/22
CHECKED BY: DATE:
APPROVED BY: WILSON CHANG DATE: 2003/08/22

TITLE: USB A TYPE PLUG R/A CONNECTOR(SMT)

MOLEX INCORPORATED

MATERIAL NO.: SEE TABLE
DOCUMENT NO.: SD-48037-002
SHEET NO.: 1 OF 1
SIZE: A3

THIS DRAWING CONTAINS INFORMATION THAT IS PROPRIETARY TO MOLEX INCORPORATED AND SHOULD NOT BE USED WITHOUT WRITTEN PERMISSION