附表

FORCE (gf)		KNOB COLOR	Operating Life With Load
A	70±30	GREY	100,000 Cycles
H	100±30	WHITE	
0	130±30	GREY	
1	160±30	BLACK C/RED	
3	250±50	IVORY	50,000 Cycles

L	
A	3.15
B	3.85
C	5.85
D	8.35
E	6.85
F	6.15
G	12.35
H	11.35

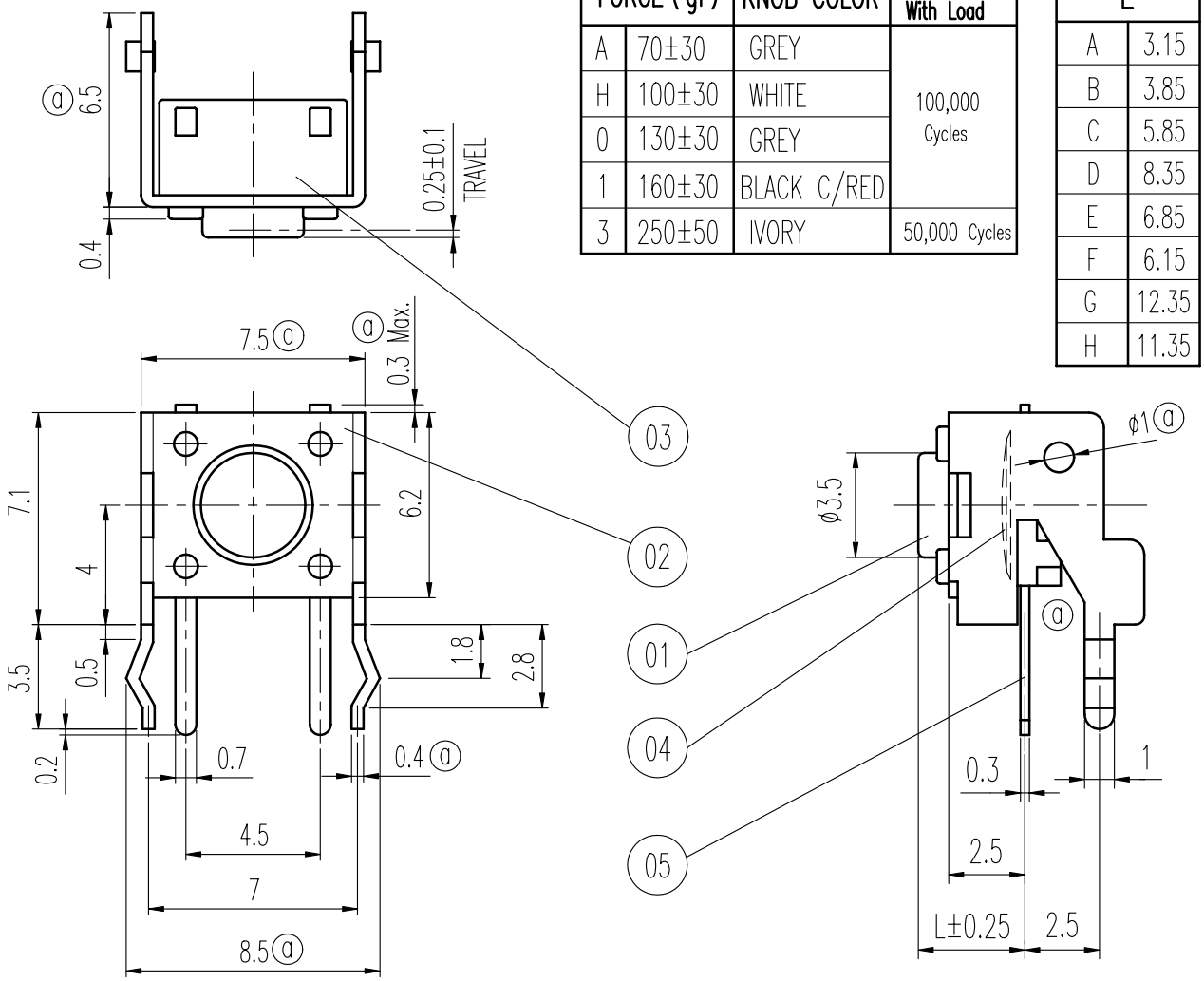

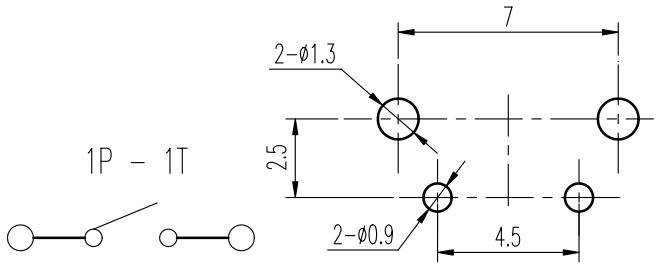

示意图 SCHEMATIC　　安装孔 PIERCING PLAN

规格Specifications

额定负荷 Ratings	DC 12 V 50 mA
初期接触电阻 Initial Contact Resistance	100 mΩ Max.
绝缘电阻 Insulation Resistance	DC 100 V 60±5 Sec. 100 MΩ Min.
抗电强度 Dielectric Voltage	AC 250 V(50~60HZ) 60±5 Sec.
操作力 Operating Force	见附表
负荷寿命 Operating Life With Load	见附表

序NO.	零件 PART	材料 MATERIAL	数量 QTY	备注 REMARKS
05	端子 TERMINAL	C2680R	2	Ag PLATED
04	弹片 SPRING PLATE	C5210R	1	Ag CLAD
03	胶壳 HOUSING	PA	1	BLACK C
02	盖片 COVER	SPTE	1	NATURAL
01	胶柄 KNOB	PA	1	见附表

标号 REV	内容 DESCRIPTION	签名 SIGN.	日期 DATE
A02	变更盖片厚度、形状及相关尺寸,见ⓐ	张渠江	2009-12-21
A01		张渠江	2009-8-10

DWG NO. ITEM3114

TOLERANCES UNLESS OTHERWISE SPEC.	
UNDER 1	± 0.10
1 – 10	± 0.30
OVER 10	± 0.50

TITLE	TACT SWITCH		ITEM NO	RS-022R05__-PA
DRAWN	张渠江	2009-12-21	VERSION	A02
REVIEWED	王光云	2009-12-21	SCALE	
APPROVED	马建和	2009-12-21	PROJECTION	

PAGE 1 OF 1　UNIT mm

COMAX 高铭电子（惠州）有限公司
Comax Electronics(Huizhou)Co.,Ltd.

ED37 版本:A01