used for: D-SUB

POS.	A -0.76	B -0.25	C	Part NO.
15	31.19	16.46	25.00 $^{+0.12}_{-0.13}$	**164A18019X**
26	39.52	24.79	33.30 $^{+0.15}_{-0.1}$	**164A18029X**
44	53.42	38.50	47.04 ±0.13	**164A18039X**
62	69.70	54.96	63.50 ±0.13	**164A18049X**

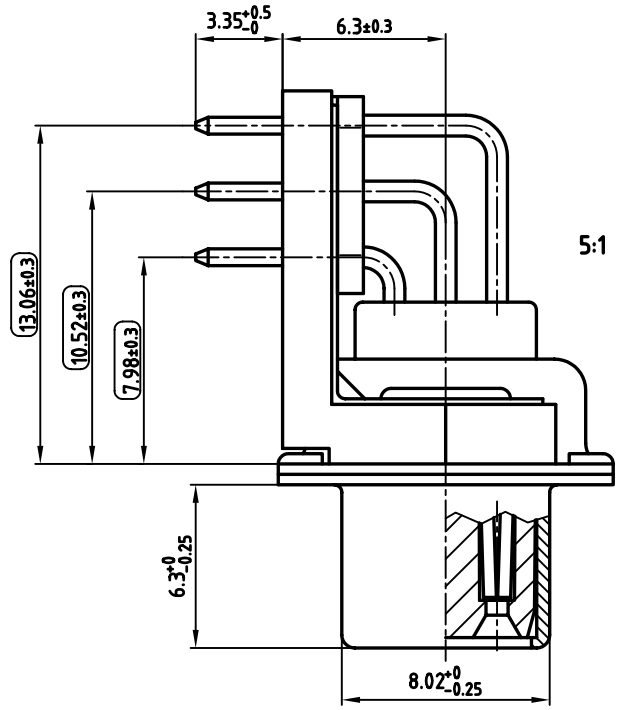

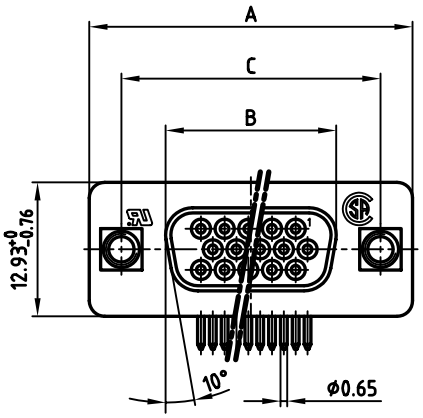

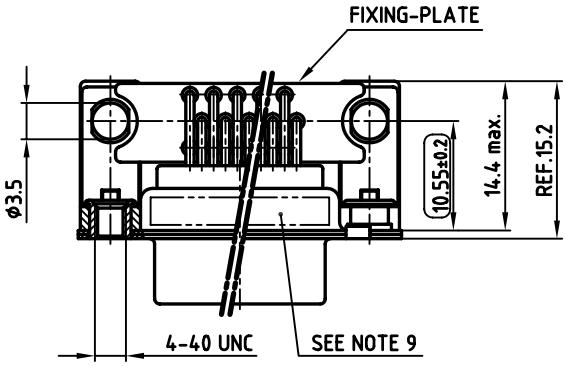

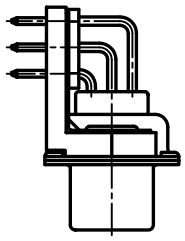

NOTES:

1. METALSHELLS: STEEL; min. 320µ" TIN
2. INSULATORS: PBT GF UL 94 V-0, BLACK
3. CONTACTS: COPPER ALLOY
   PLATING: 8µ" HARD GOLD OVER min. 50µ" NICKEL
4. MOUNTING BRACKET: PBT GF UL 94 V-0, BLACK
5. THREADED INSERT: COPPER ALLOY; min. 200µ" TIN OVER 80µ" NICKEL
6. FIXING-PLATE: PBT GF UL 94 V-0, BLACK
7. P.C.B. HOLE DRILLINGS ON DRAWING NO.: 16V1IH6B
8. MAXIMUM TORQUE VALUE FOR THREAD: 6" LBS
9. CONNECTOR IS PART MARKED: PART-NO. CONEC ABC
10. ( ) = CHECK DIMENSION

Directive 2002/95/EC „RoHS" Compliant

APPROVAL # FREIGABE # DEBLOCAGE # AUTOR/ZACION # APPROVAL

CUSTOMER APPROVAL DATE:

NAME: TITLE:

COMPANY NAME:

APPROVAL # FREIGABE # DEBLOCAGE # AUTOR/ZACION # APPROVAL

THIS DRAWING MAY NOT BE COPIED OR REPRODUCED IN ANY WAY, AND MAY NOT BE PASSED ON TO A THIRD PARTY WITHOUT WRITTEN PERMISSION. OWNERSHIP AND COPYRIGHT OF CONEC GmbH

DO NOT ALTER CAD DRAWING BY HAND

rev.	description	date	name

tolerance

dim. in mm

2005	date	name
drawn	11.02.	Lehmenkühler
appd.	14.02.	Mickenbecker
norm	DIN 41652	
d-old		

CONEC®

scale: 2:1 (5:1)

material: SEE NOTES

title:

D-SUB HD FEMALE 90°

15-62pos. 0.350inch

threaded insert, mounting + grounding bracket

dwg no: 16K1A1326

AutoCAD 2004 | DIN-A 3 | sh: 1/1

part no: SEE TABLE