Identification	Cable entry	Part number Low construction	Part number High construction	Drawing (dimensions in mm)
Han® B, Bulkhead mounted housing, With thermo-plastic cover, IP65 		09 30 010 0302		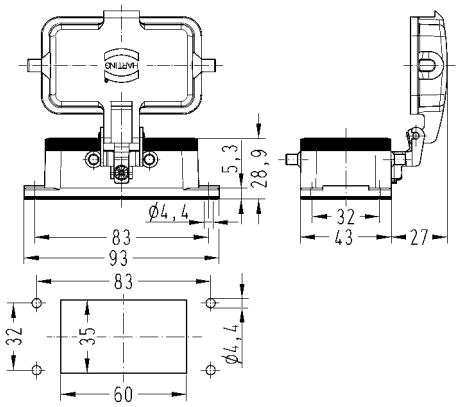 Panel cut out
Han® B, Bulkhead mounted housing, With metal cover, IP65 		09 30 010 0317		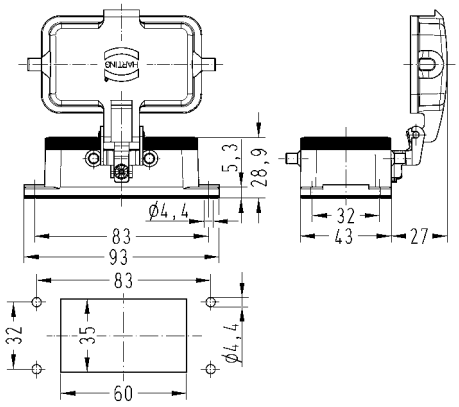 Panel cut out
Han® B, Bulkhead mounted housing, With self-closing cover, IP65, IP67 IP44 for self-closing covers in unlocked position		09 30 010 1314		