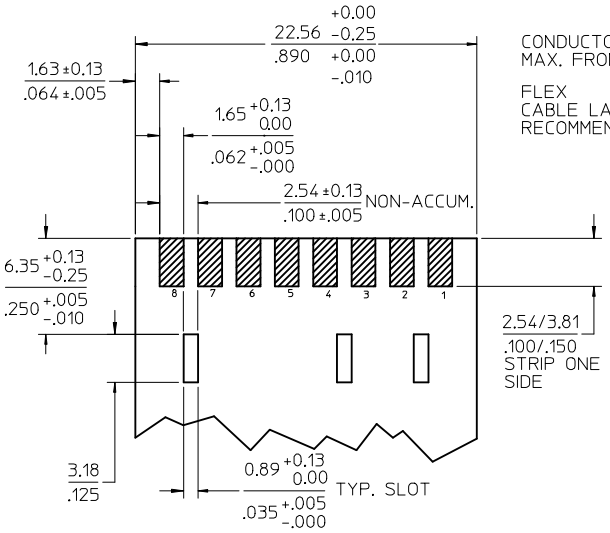

CONDUCTORS TO BE 0.25/.010 MAX. FROM EDGE OF CABLE

FLEX CABLE LAYOUT:
RECOMMENDED THK. 0.13/0.28/.005/.011

NOTES:
1. MATERIAL-HOUSINGS: POLYESTER
   TERMINALS: BRASS
2. FINISH: OVERALL MATTE TIN (0.00254)/.000100 MIN. OVER (0.00127)/.000050 MIN. NICKEL
3. PRODUCT SPEC: NONE
4. PKG. SPEC: PK-4850-001

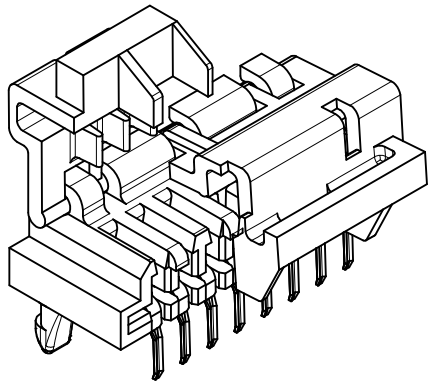

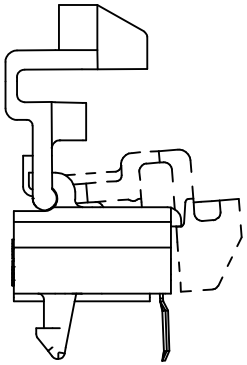

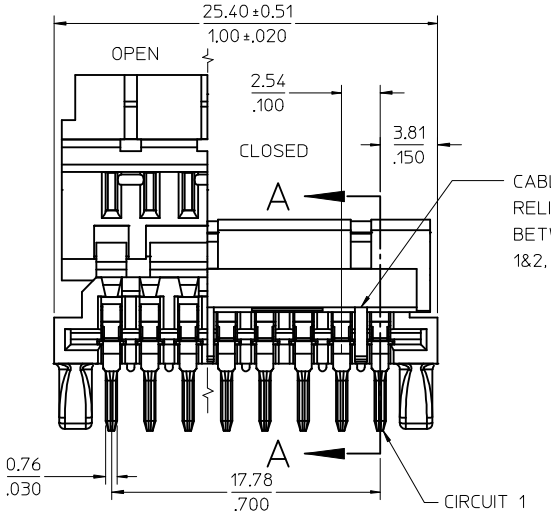

CABLE SLOTS FOR STRAIN RELIEF LOCATED BETWEEN CKTS. 1&2, 3&4, 7&8

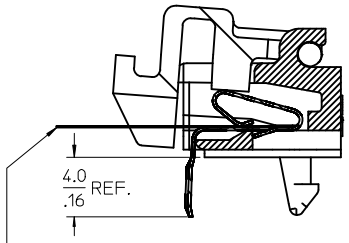

FLAT FLEXIBLE CABLE (AT CONTACT AREA) (ONE SIDE STRIPPED)

SECTION A-A

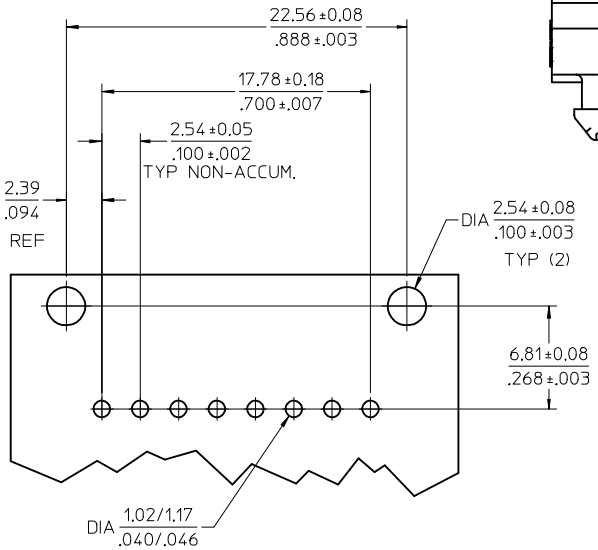

PCB LAYOUT: COMPONENT SIDE
RECOMMENDED PCB THK. .062±.005

ADD PK SPEC.	2013/05/13		
EC NO: UCP2013-4934	2013/05/13		
DRWN:MKIPPER	2013/05/13		
CHKD:JBELL	2013/05/16		
APPR:FSMITH			
DESCRIPTION			
E1	REV		

QUALITY SYMBOLS: E4 =0, E5 =0, E6 =0

GENERAL TOLERANCES (UNLESS SPECIFIED)

	mm	INCH
4 PLACES	± ---	± ---
3 PLACES	± ---	± .010
2 PLACES	± 0.25	± .015
1 PLACE	± 0.38	± ---
0 PLACE	±	±
ANGULAR ±1/2°		

DRAFT WHERE APPLICABLE MUST REMAIN WITHIN DIMENSIONS

DIMENSION STYLE: MM/IN
SCALE: 4:1
DESIGN UNITS: INCH
THIRD ANGLE PROJECTION

DRAWN BY: SCHAFER DATE:
CHECKED BY: SAMIEC DATE: 98/10/09
APPROVED BY: MARGULIS DATE:
MATERIAL NO.: 015-25-4081

TITLE: FLAT FLEX CABLE CONNECTOR ASSEMBLY

molex

DOCUMENT NO.: SD-4850-001
SHEET NO.: 1 OF 1
SIZE: C

THIS DRAWING CONTAINS INFORMATION THAT IS PROPRIETARY TO MOLEX INCORPORATED AND SHOULD NOT BE USED WITHOUT WRITTEN PERMISSION