PART NUMBER	REV	FIRST USED	TERMINATOR	FEED TYPE	DESCRIPTION
1426125–1	K	–	LEADMAKER	MECH POST FEED	CUTS CARRIER
1426125–2	K	–	BENCH	MECH PRE FEED	CUTS CARRIER
1426125–6	K	–	LEADMAKER	MECH POST FEED	CONTINUOUS CARRIER
7–1426125–1	K	–	LEADMAKER	MECH POST FEED	–1 AND SPARE PARTS
7–1426125–2	K	–	BENCH	MECH PRE FEED	–2 AND SPARE PARTS
7–1426125–6	K	–	LEADMAKER	MECH POST FEED	–6 AND SPARE PARTS
7–1426125–7	E	–	–	–	SPARE PARTS KIT

USED ON –

CRIMP DATA AMP TERMINAL AMP CRIMP SPECS

TERMINAL NAME: 025 RECEPTACLE CONTACT

CRIMP	SIZE	TYPE	RANGE
WIRE	1.40 [.055 IN]	F	0.22 – 0.50mm²
INSUL	1.40 [.055 IN]	F	1.10–1.70 [.043–.067 IN]

WIRE STRIP LENGTH 3.00–3.50 [.118–.138 IN]

APPL INSTRUCTION 408–8322

TERMINAL – –
APPL SPEC 114–5250 –

FEED 7.50 [.295 IN]

TERMINALS APPLIED

1123343	–	–	–	–
–	–	–	–	–
–	–	–	–	–
–	–	–	–	–
–	–	–	–	–
–	–	–	–	–
–	–	–	–	–
–	–	–	–	–

WIRE SIZE mm² AWG	CRIMP HEIGHT	PIN PN & LENGTH [IN]
0.50mm²	1.06 ±0.05 [.042 ±.002 IN]	3–354779–8 [.3180]
0.30mm²	0.96 ±0.05 [.038 ±.002 IN]	4–354779–6 [.3220]
0.22mm²	0.84 ±0.05 [.033 ±.002 IN]	5–354779–7 [.3275]
–	–	–
–	–	–
–	–	–
–	–	–
–	–	–
–	–	–
–	–	–
–	–	–
–	–	–
–	–	–
–	–	–
–	–	–

SET UP GAGE	LAYOUT
458637–3	L1426125

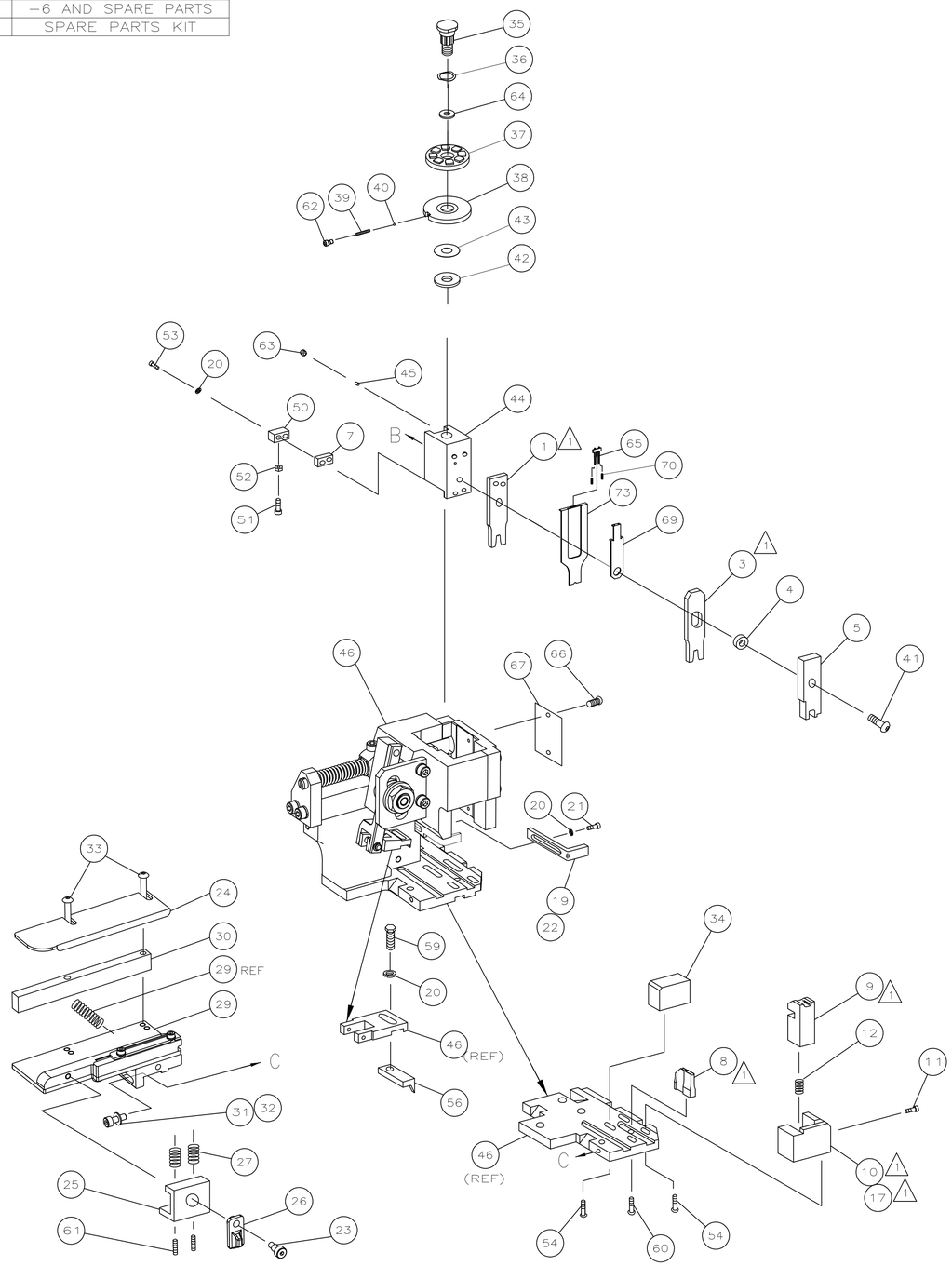

1. RECOMMENDED SPARE PARTS.
2. GREASE RAM, CAM, CAM FOLLOWER AND FEED ROD LIGHTLY.
3. LUBRICATE DAILY PER THE APPLICATOR INSTRUCTION SHEET SUPPLIED WITH THE APPLICATOR.
4. APPLICATION SPECIFICATION 114–5250 HAS AN INSULATION HEIGHT REQUIREMENT.

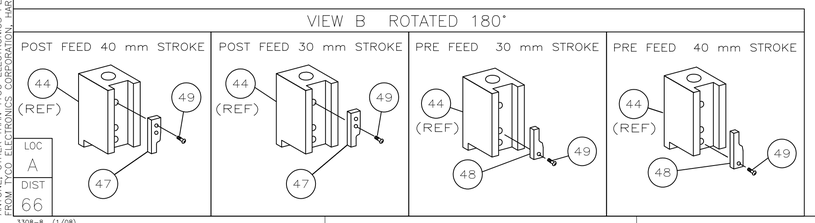

3308–8 (1/08)

–	1	1	1	1	1	1	1490525–3	DEPRESSOR, WIRE	73
–	1	1	1	1	1	1	1426125	PRINT, APPLICATOR LOG SHEET	72
–	1	1	1	1	1	1	1338705–1	DOCUMENTATION PACKAGE	71
–	2	2	2	2	2	2	23147–7	SPRING, DEPRESSOR	70
–	1	1	1	1	1	1	1490524–1	SPACER, DEPRESSOR	69
									68
–	1	1	1	1	1	1	461264–1	PLATE, IDENTIFICATION	67
–	2	2	2	2	2	2	21017–2	SCR,DRIVE(#2x.19)ID PLATE	66
–	1	1	1	1	1	1	1424350–1	HOLDER, PIN, WIRED	65
–	1	1	1	1	1	1	986950–1	WASHER, FLAT PRECISION	64
–	1	1	1	1	1	1	3–18031–0	SCR,SKT SET(M6X6)RAM	63
–	1	1	1	1	1	1	18023–9	SCR,SHC(M4X6)INS DISC	62
–	2	2	2	2	2	2	2–18032–5	SCR,SET(M5X20)DRAG	61
–	1	1	1	1	1	1	18024–7	SCR,BHC(M4X10)ANVIL	60
–	1	1	1	1	1	1	5–18022–2	SCR,HEX(M4X8)FEED FINGER	59
									58
									57
–	1	1	1	1	1	1	1338685–1	PAWL, FEED	56
									55
–	4	4	4	4	4	4	18024–8	SCR,BHC(M4x12)SHEAR HOLDER	54
–	2	2	2	2	2	2	9–18023–6	SCR,SHC(M4x14)TERM HLD DWN	53
–	1	1	1	1	1	1	18030–1	NUT,HEX(M3)HOLD DOWN	52
–	1	1	1	1	1	1	811242–5	BUMPER, HOLDDOWN	51
–	1	1	1	1	1	1	690753–2	SPACER, TONKER	50
–	1	1	1	1	1	1	18024–3	SCR,BHC(M3X10)CAM	49
–	–	1	–	–	1	–	1338675–1	CAM, PRE FEED 30 & 40 mm ST	48
–	1	–	1	1	–	1	1338676–1	CAM, POST FEED 30 & 40 mm ST	47
–	1	1	1	1	1	1	1320999–3	APPLICATOR BASIC SUBASSY	46
–	1	1	1	1	1	1	690191–1	PLUG, NYLON	45
–	1	1	1	1	1	1	1338660–3	RAM	44
–	1	1	1	1	1	1	690125–1	WASHER, LAMINATED	43
–	1	1	1	1	1	1	690124–1	WASHER, RAM	42
–	1	1	1	1	1	1	2–18024–6	SCR,BHC(M8X25)RAM	41
–	1	1	1	1	1	1	23241–1	BALL, STEEL	40
–	1	1	1	1	1	1	2–22278–7	SPRING, COMPRESSION	39
–	1	1	1	1	1	1	1320922–1	DISC, INSULATION	38
–	1	1	1	1	1	1	354777–1	WIRE DISC, PLASTIC	37
–	1	1	1	1	1	1	22480–5	WASHER, SPRING	36
–	1	1	1	1	1	1	690212–1	POST, RAM	35
–	1	1	1	1	1	1	1320934–6	SUPPORT, TERMINAL	34
–	2	2	2	2	2	2	1–18024–0	SCR,BHC(M4X20)STRIP GUIDE	33
–	1	1	1	1	1	1	18027–2	WASHER, FLAT(M4)	32
–	1	1	1	1	1	1	1–18023–2	SCR,SKT CAP(M4X12)MOUNT BLOCK	31
–	1	1	1	1	1	1	1320908–4	SPACER, STRIP GUIDE	30
–	1	1	1	1	1	1	1633073–1	STRIP GUIDE PLATE ASSY	29
									28
–	2	2	2	2	2	2	1–22284–0	SPRING, DRAG	27
–	1	1	1	1	1	1	356835–1	LEVER, DRAG RELEASE	26
–	1	1	1	1	1	1	240792–1	DRAG, TERMINAL	25
–	1	1	1	1	1	1	1320928–1	PLATE, STRIP GUIDE	24
–	1	1	1	1	1	1	980371–4	SCR,SHC SHLD	23
–	1	–	1	1	–	1	690472–2	STRIPPER	22
–	1	1	1	1	1	1	1–18023–1	SCR,SHC(M4X10)STRIPPER	21
–	4	4	4	4	4	4	18025–2	WASHER,LOCK(M4)STRIPPER	20
–	–	1	–	–	1	–	690472–1	STRIPPER	19
									18
1 –	1	–	–	1	–	–	1338684–1	HOLDER, SHEAR, FRONT (NO–CUT)	17
									16
									15
									14
									13
–	1	1	1	1	1	1	5–22280–0	SPRING, SHEAR	12
–	1	1	1	1	1	1	356885–4	STOP, SHEAR	11
–	–	1	1	–	1	1	1320921–1	HOLDER, SHEAR, FRONT (CUT)	10
1 –	1	1	1	1	1	1	462006–1	SHEAR, FLOAT (FRONT)	9
1	2	2	2	1	1	1	1–1333201–2	ANVIL	8
–	1	1	1	1	1	1	240641–2	SPACER, DEPRESSOR (REAR)	7
									6
–	1	1	1	1	1	1	2–455889–0	DEPRESSOR, SHEAR (FRONT)	5
–	1	1	1	1	1	1	238011–7	SPACER, BLOCK CRIMPER	4
1 1	2	2	2	1	1	1	1366753–1	CRIMPER, INSULATION	3
									2
1 1	2	2	2	1	1	1	1–456402–7	CRIMPER, WIRE	1
	–77	–76	–72	–71	–6	–2	–1	PART NO / DESCRIPTION	ITEM NO
	QTY REQD PER ASSY								

PARTS LIST

DWN M.CLIFFORD 07DEC00	MATERIAL – –	HEAT TREAT – –	
CHK L.LOFTHOUSE 15–01–01	Tyco Electronics	Tyco Electronics Corporation Harrisburg, PA 17105–3608	
APVD F.BACKHURST 07DEC00			
NAME SIDE FEED HD–1 APPLICATOR			
SCALE –	SIZE A1	DRAWING NO 1426125	SHEET 1 OF 1 REV K

P	LTR	REVISION RECORD	DATE	DWN	APVD
	K	ECR–10–016337	8–2010	MY	GB

DIMENSIONS: INCHES

TOLERANCES UNLESS OTHERWISE SPECIFIED:
0 PLC ± –
1 PLC ± –
2 PLC ± 0.5 [.02 IN]
3 PLC ± –
4 PLC ± –
ANGLES ± –
SURFACE TEXTURE √

CUSTOMER ACCESSIBLE PRODUCTION DRAWING

THIS DRAWING IS A CONTROLLED DOCUMENT.
DWG NO 1426125
THIS INFORMATION IS CONFIDENTIAL AND PROPRIETARY TO TYCO ELECTRONICS CORPORATION AND ITS WORLDWIDE SUBSIDIARIES AND AFFILIATES. ONLY TYCO ELECTRONICS PERSONNEL OR PERSONNEL WITH WRITTEN AUTHORIZATION FROM TYCO ELECTRONICS CORPORATION, HARRISBURG, PENNSYLVANIA USA, MAY NOT BE DISCLOSED TO OTHERS OR USED FOR ANY OTHER PURPOSE.