THIS DRAWING IS UNPUBLISHED. RELEASED FOR PUBLICATION -,- .
© COPYRIGHT - By - ALL RIGHTS RESERVED.

LOC	DIST
GP	00

REVISIONS

P	LTR	DESCRIPTION	DATE	DWN	APVD
	B	ACTIVATED PER ECO-11-010363	22JUL2011	CJV	EDB

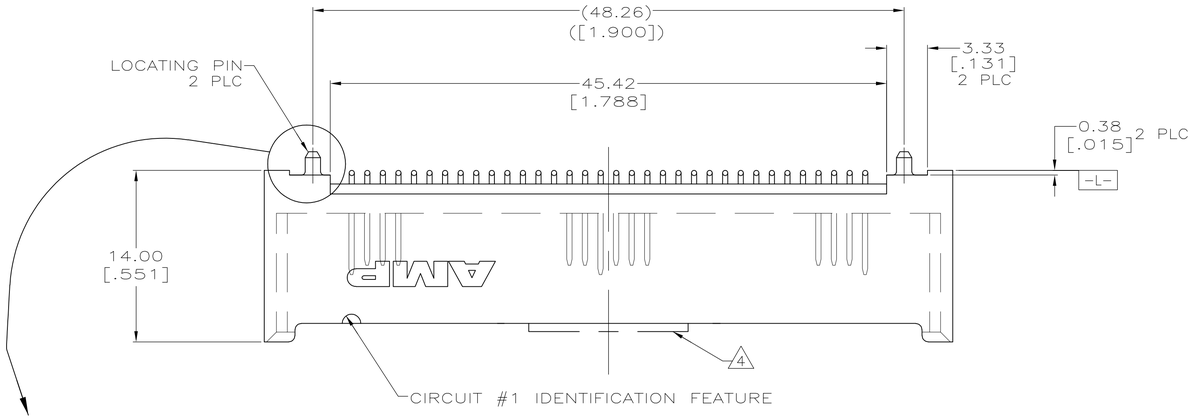

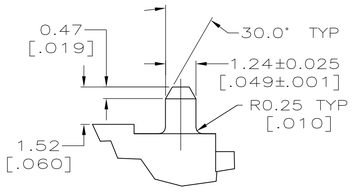

SCALE 8:1

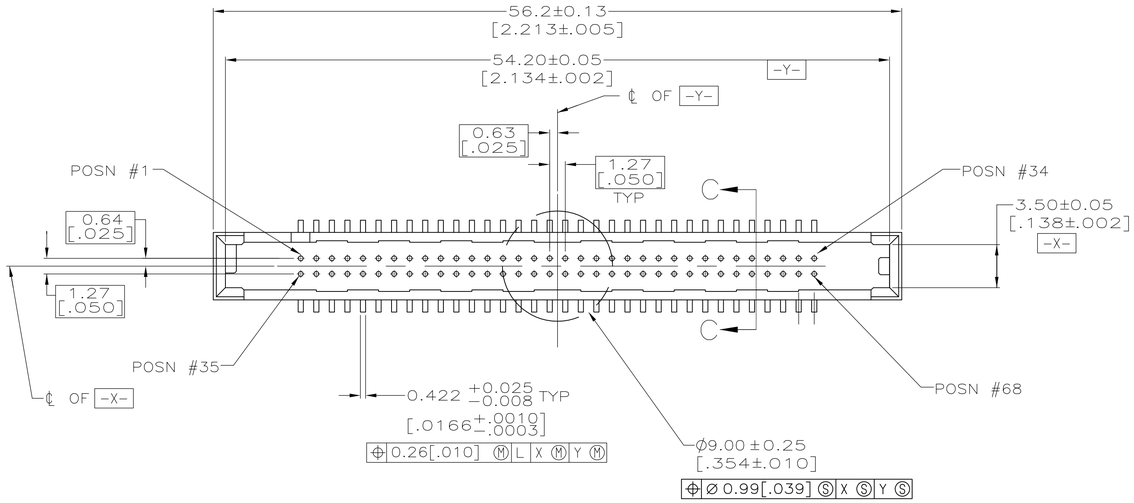

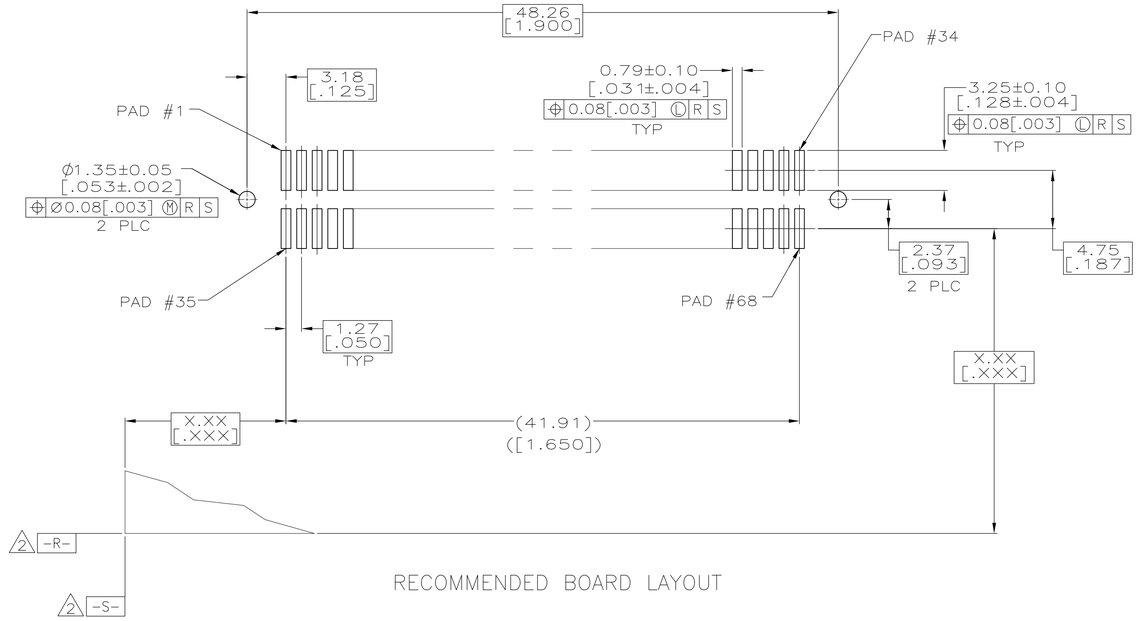

RECOMMENDED BOARD LAYOUT

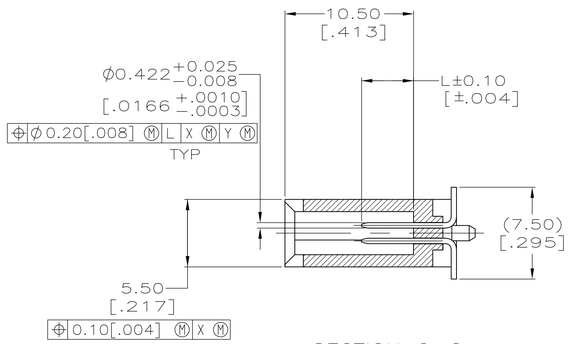

SECTION C-C

5	AS SHOWN	1,17,34 35,51,68	ALL OTHER PINS	36,67	5145485-2
3	AS SHOWN	1,17,34 35,51,68	ALL OTHER PINS	36,67	5145485-1
PACKAGING	DESCRIPTION	5.0[.197]	4.25[.167]	3.5[.138]	PART NUMBER
		" L " PIN LENGTH AND LOCATION			

1. CONTACTS: 0.00076[.000030] MINIMUM GOLD IN CONTACT AREA, 0.00381[.000150] MIN TIN ON SOLDER TAILS, ALL OVER 0.00127[.000050] MINIMUM NICKEL
2. DATUMS AND BASIC DIMENSIONS ESTABLISHED BY CUSTOMER
3. PRODUCT PACKAGED IN 72mm WIDE TAPE AND REEL.
4. KAPTON VACUUM PICK-UP BUTTON (SHOWN IN PHANTOM TO SHOW CONNECTOR DETAIL).
5. PRODUCT PACKAGED IN TUBES.
6. MATERIAL:
   HOUSING: LCP, COLOR BLACK
   CONTACTS: BRASS

COPYRIGHT 2005
TYCO ELECTRONICS CORP
ALL RIGHTS RESERVED

THIS DRAWING IS A CONTROLLED DOCUMENT.

DIMENSIONS: mm [INCHES]

TOLERANCES UNLESS OTHERWISE SPECIFIED:
0 PLC ± –
1 PLC ± –
2 PLC ± 0.13[.005]
3 PLC ± –
4 PLC ± –
ANGLES ± 2°

MATERIAL 6 FINISH 1

DWN A. FERNANDEZ-DOCK5 03-23-05
CHK D.L. GORENC 03-23-05
APVD M. WALMSLEY 03-23-05
PRODUCT SPEC —
APPLICATION SPEC —
WEIGHT —

TE Connectivity

NAME: PIN HEADER ASSEMBLY, VERTICAL, 68 POSITION, SURFACE MOUNT, AMP PC CARD

SIZE	CAGE CODE	DRAWING NO	RESTRICTED TO
A1	00779	C-5145485	—

CUSTOMER DRAWING SCALE 4:1 SHEET 1 OF 1 REV B