DRAWING MADE IN THIRD ANGLE PROJECTION

466644 ⇨ 466644

PART NUMBER	REV	FIRST USED	
~~466644-2~~	~~B~~	~~565435-5~~	SUPERSEDED BY 466644-3
466644-3	H	565435-5	
466644-4	H	354500-1	

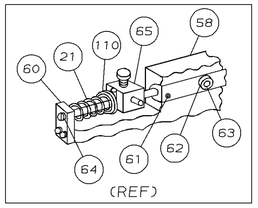

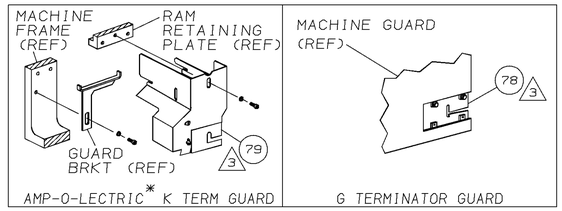

TERMINAL NAME: PIN & SOCKET CONTACT	
PIN	SOCKET
207438 △6	△6 207437
66728 △6	

TERM APPL SPEC 114-10011

CRIMPING DATA			
PAD LTR	CRIMP HEIGHT	WIRE SIZE	
A	.027 ±.002	22	
B	.024 ±.002	24	
C	.022 ±.002	26 OR 28	
D	NOT	USED	
CRIMP	SIZE	TYPE	RANGE
WIRE	.055	F	28 - 22
INSUL	.062	O	.036 - .054
FEED	APPL INST	SET UP GAGE	LAYOUT
.350	408-8040	458637-1	933
WIRE STRIP LENGTH		-	

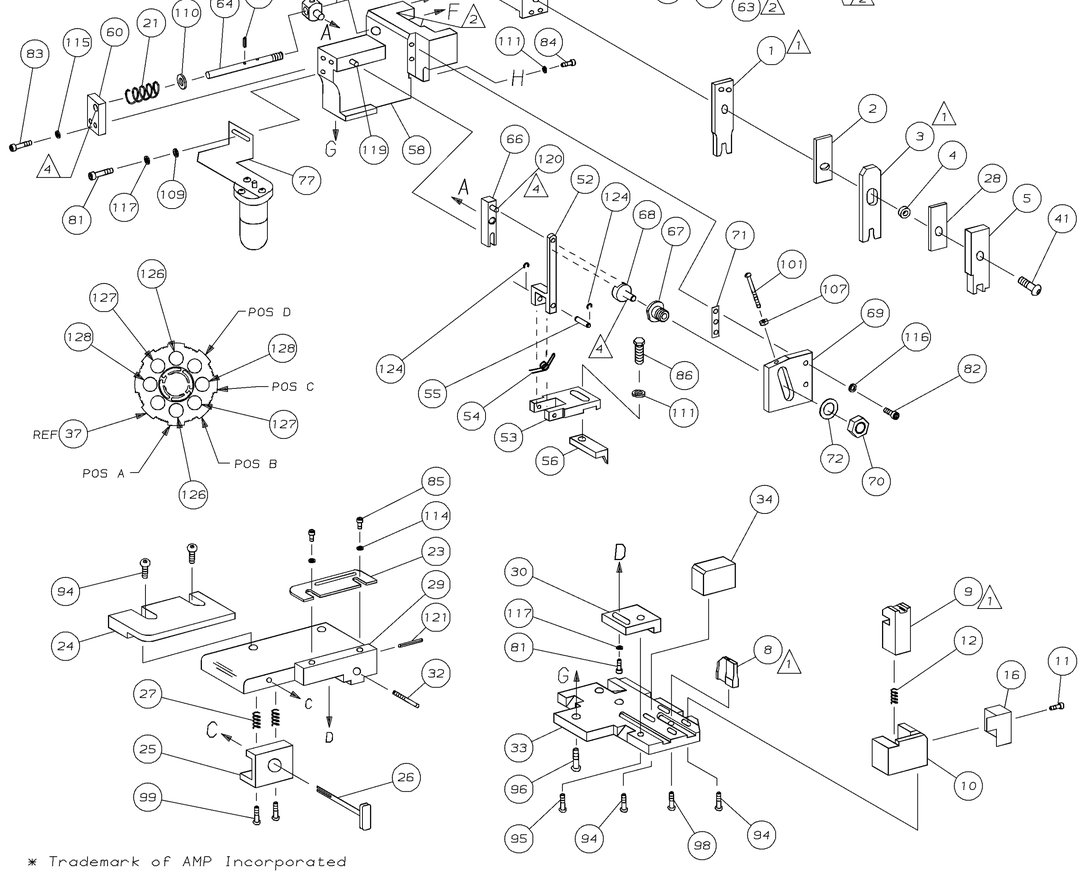

-4	-3	-2	U/M	DWG SIZE	PART NO	DESCRIPTION	ITEM NO
							129
2	2		-	C	8-354779-0	PIN, WIRE DISC (.3390) C	128
2	2		-	C	7-354779-7	PIN, WIRE DISC (.3375) B	127
2	2		-	C	6-354779-9	PIN, WIRE DISC (.3335) A	126
1	1		-	A	986950-1	WASHER, FLAT PRECISION	125
REF	REF		-	A	21045-3	RING, RET "C" (ø.187) FD FING PIN	124
							123
REF	REF		-	A	5-21028-1	PIN, SLT SPR (ø.125x.50) ADJ ROD	122
1	1		-	A	4-21028-0	PIN, SLT SPR (ø.093x.75) ST GDE PL	121
REF	REF		-	A	1-21030-1	PIN, DOWEL (ø.187x.50) LEVER	120
REF	REF		-	A	1-21030-6	PIN, DOWEL (ø.187x1.25) HOUSING	119
							118
2	2		-	A	21024-5	WASHER, LOCK (#10) ADJ BLOCK	117
REF	REF		-	A	21024-5	WASHER, LOCK (#10) ADJ PLATE	116
REF	REF		-	A	21024-5	WASHER, LOCK (#10) FEED GDE ROD	115
2	2		-	A	21024-2	WASHER, LOCK (#4) FRONT STP GUIDE	114
							113
							112
4	4		-	A	21024-4	WASHER, LOCK (#8) STRIPPER	111
REF	REF		-	A	21899-4	WASHER, FLAT (ø5/16) SCREW ADJ	110
1	1		-	A	21899-2	WASHER, FLAT (NO.10) LUB ASSY	109
1	1		-	A	21018-5	NUT, HEX (NO.6) HOLDDOWN	108
REF	REF		-	A	21018-5	NUT, HEX (6-32) FEED ADJ	107
							106
							105
1	1		-	A	992031-1	PIN, CLEVIS	104
1	1		-	A	21009-2	SCR, SKT SET (1/4-20x.25 LW) RAM	103
2	2		-	A	21017-2	SCR, DRIVE (#2x.19) ID PLATE	102
REF	REF		-	A	6-23715-5	SCR, PAN HD (6-32x1.50) FEED ADJ	101
1	1		-	B	461264-1	PLATE, IDENTIFICATION	100
2	2		-	A	3-21002-0	SCR, BHC (10-32x.88) DRAG	99
1	1		-	A	22733-8	SCR, BHC (8-32x.38 LW) ANVIL	98
REF	REF		-	A	2-21002-9	SCR, BHC (10-32x.75) CAP	97
REF	REF		-	A	2-22733-8	SCR, BHC (1/4-20x.62) HOUSING	96
REF	REF		-	A	2-21002-7	SCR, BHC (10-32x.50) SG ADJ BLOCK	95
6	6		-	A	2-21002-2	SCR, BHC (8-32x.50) SHEAR	94
							93
							92
1	1		-	A	1-21002-7	SCR, BHC (6-32x.38) CAM	91
							90
1	1		-	A	7-21000-9	SCR, SHC (4-40x.19) STRIPPER	89
							88
							87
1	1		-	A	2-22603-0	SCR, HEX HD (8-32x.31) FEED FINGER	86
2	2		-	A	1-21000-3	SCR, SHC (4-40x.25) F ST GUIDE	85
3	3		-	A	2-21000-7	SCR, SHC (8-32x.50) STRIPPER	84
REF	REF		-	A	3-21000-7	SCR, SHC (10-32x.75) FEED ROD GD	83
REF	REF		-	A	3-21000-6	SCR, SHC (10-32x.62) FD ADJ BLK	82
2	2		-	A	3-21000-4	SCR, SHC (10-32x.38) SG ADJ BL	81
REF	REF		-	A	3-21000-4	SCR, SHC (10-32x.38) PIVOT BLK	80
-	REF		-	B	455749-1	GUARD, WINDOW	79
REF	-		-	B	679532-1	INSERT, GUARD	78
1	1		-	C	1-465184-0	LUBRICATOR ASSY	77
							76
							75
1	1		-	A	690603-1	SPRING, ASSIST	74
1	1		-	A	23030-1	SCR, SHC (6-32x.25 SL) INS DISC	73
REF	REF		-	A	458109-1	WASHER, SPECIAL	72
REF	REF		-	A	690517-1	SPACER	71

QTY REQD PER ASSY — REVISION OF EACH ASSY NO (WHEN BLANK, USE DWG REVISION) — PARTS LIST

-4	-3	-2	U/M	DWG SIZE	PART NO	DESCRIPTION	ITEM NO
~~-2~~	~~BENCH MODEL K~~		~~MECH PRE FEED~~			SUPERSEDED	
-3	BENCH MODEL K		MECH PRE FEED				
-4	BENCH MODEL G		MECH PRE FEED				
REF	REF		-	B	22594-8	NUT, HEX (1/2-20)	70
REF	REF		-	B	240628-1	PLATE, ADJUSTMENT	69
REF	REF		-	B	240626-1	SHAFT, PIVOT	68
REF	REF		-	B	240633-1	BUSHING	67
REF	REF		-	A	455680-1	LEVER, INTERMEDIATE	66
REF	REF		-	B	240629-1	BLOCK, PIVOT	65
REF	REF		-	A	240632-2	SCREW, ADJ FEED ROD	64
REF	REF		-	B	240659-3	PIN, CAM ROLLER	63
REF	REF		-	B	240658-1	ROLLER, CAM	62
REF	REF		-	B	454398-2	ROD, FEED	61
REF	REF		-	A	454178-1	GUIDE, FEED ROD	60
REF	REF		-	C	454220-1	CAP, RAM	59
REF	REF		-	D	454485-1	HOUSING	58
							57
1	1		-	B	690542-2	PAWL, FEED	56
REF	REF		-	B	240624-1	PIN, FEED FINGER	55
REF	REF		-	B	691499-1	SPRING, FEED FINGER	54
REF	REF		-	B	690541-1	HOLDER, FEED FINGER	53
REF	REF		-	A	455679-1	LEVER, TERMINAL FEED ARM	52
1	1		-	A	811242-2	BUMPER, HOLDDOWN	51
1	1		-	A	690753-1	SPACER, TONKER	50
1	-		-	B	690602-6	CAM, PRE-FEED 1 5/8 ST	49
-	1		-	B	690602-5	CAM, PRE-FEED 1 1/8 ST	48
							47
1	1		-	B	459456-1	APPLICATOR, BASIC (SUBASSY)	46
1	1		-	A	690191-1	PLUG, NYLON	45
1	1		-	C	455673-1	RAM	44
1	1		-	A	690125-1	WASHER, LAMINATED	43
1	1		-	A	690124-1	WASHER, RAM	42
1	1		-	A	7-21002-9	BOLT, CRIMPER (5/16x1.00)	41
1	1		-	A	23241-6	BALL, STEEL	40
1	1		-	A	690170-1	SPRING, COMPRESSION	39
1	1		-	C	690142-1	DISC, INSULATION	38
1	1		-	D	354777-1	WIRE DISC, PLASTIC	37
1	1		-	A	22480-5	WASHER, SPRING	36
1	1		-	B	690212-1	POST, RAM	35
1	1		-	B	692776-1	SUPPORT, TERMINAL	34
REF	REF		-	D	455675-1	PLATE, BASE	33
1	1		-	A	690432-3	SCREW, ADJUSTMENT	32
							31
REF	REF		-	B	455689-1	BLOCK, STRIP GUIDE ADJ	30
1	1		-	C	455671-1	PLATE, STRIP GUIDE	29
1	1		-	C	1-455888-0	SPACER, FRONT SHEAR DEP	28
2	2		-	A	1-22284-0	SPRING, DRAG	27
1	1		-	B	690546-1	LEVER, DRAG RELEASE	26
1	1		-	B	240792-1	DRAG, TERMINAL	25
1	1		-	D	8-690504-3	GUIDE, STRIP (REAR)	24
1	1		-	A	690438-1	GUIDE, STRIP (FRONT)	23
							22
REF	REF		-	A	4-22284-9	SPRING, FEED RETURN	21
1	1		-	A	679218-1	STRIPPER WIRE STOP ASSY	20
1	1		-	B	458949-1	STRIPPER	19
							18
							17
1	1		-	B	691667-1	GUARD, CHIP (FRONT)	16
							15
							14
							13
1	1		-	A	6-22279-3	SPRING, SHEAR	12
1	1		-	B	690461-1	STOP, SHEAR	11
1	1		-	C	468798-1	HOLDER, SHEAR (FRONT)	10
1	1		-	C	462006-3	SHEAR, FLOAT (FRONT)	9
1	1		-	C	7-690512-7	ANVIL	8
							7
							6
1	1		-	C	455889-9	DEPRESSOR, SHEAR (FRONT)	5
1	1		-	B	238011-6	SPACER, BLOCK CRIMPER	4
1	1		-	C	4-456135-1	CRIMPER, INSULATION	3
1	1		-	C	455888-3	SPACER, CRIMPER	2
1	1		-	C	1-456402-4	CRIMPER, WIRE	1

QTY REQD PER ASSY — REVISION OF EACH ASSY NO (WHEN BLANK, USE DWG REVISION) — PARTS LIST

466644

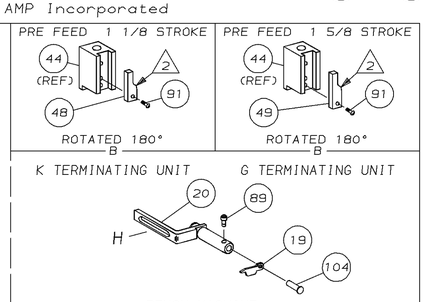

1. RECOMMENDED SPARE PARTS.
2. GREASE LIGHTLY.
3. GUARD MUST BE IN PLACE WHEN OPERATING APPLICATOR IN A BENCH MACHINE.
4. LUBRICATE DAILY USING NO. 20 MACHINE OIL.
5. ITEMS WITH QTY OF REF SPECIFIED (EXCEPT ITEMS 78 AND 79) ARE USED ON ITEM 46.
6. WHEN CHANGING FROM 66728 TO 207438/207437 & VICE VERSA, THE STRIP GUIDE PLATE AND REAR STRIP GUIDE MUST BE ADJUSTED.

P	F	LTR	REVISION RECORD	APP	DATE
		H	0150-6499-95	CE	11/95
		G	ECN 0150-6101-95	TB	4-95
		F	EC 0150-5206-94 ADD -4	CE	2-94

DIMENSIONS IN INCHES. DO NOT SCALE PRINT.
TOLERANCES UNLESS OTHERWISE SPECIFIED,
2 PLC DEC ±-
3 PLC DEC ±-
4 PLC DEC ±-
ANGLES ± -
SURF TEXTURE. √
REMOVE BURRS, BREAK SHARP EDGES R.015 MAX

MATL - | HT TR - | FIN -

DR JC BAKER 2/10/94 | APP E.KOOTE 2/10/94
CHK C.ERISMAN 2/10/94 | REL B. MORGAN 3/25/94

AMP Incorporated, Harrisburg, PA 17105-3608

NAME SIDE FEED HDM APPLICATOR | MACHINE MINI APPL | REF

SCALE - | D | DWG NO 466644 | SHEET 1 OF 1 | REV H

LOC A | DIST 66

AMP 3308 REV 3-92 | 08 NOV 1995 | 13:47:28 AMP29062

THIS DRAWING IS A CONTROLLED DOCUMENT FOR AMP INCORPORATED. IT IS SUBJECT TO CHANGE AND THE CONTROLLING ENGINEERING ORGANIZATION SHOULD BE CONTACTED FOR THE LATEST REVISION.

THIS INFORMATION IS CONFIDENTIAL AND IS DISCLOSED TO YOU ON CONDITION THAT NO FURTHER DISCLOSURE IS MADE BY YOU TO OTHER THAN AMP PERSONNEL WITHOUT WRITTEN AUTHORIZATION FROM AMP INCORPORATED, HARRISBURG, PA.

* Trademark of AMP Incorporated