THIS DRAWING IS UNPUBLISHED. RELEASED FOR PUBLICATION -,- .
© COPYRIGHT - By - ALL RIGHTS RESERVED.

LOC	DIST
AF	50

REVISIONS

P	LTR	DESCRIPTION	DATE	DWN	APVD
	W1	REVISED PER ECR-20-009164	12AUG2020	MK	DH

1 DIMENSIONS IN BRACKETS ARE IN INCHES.

2 CONTINUOUS STRIP ON REELS

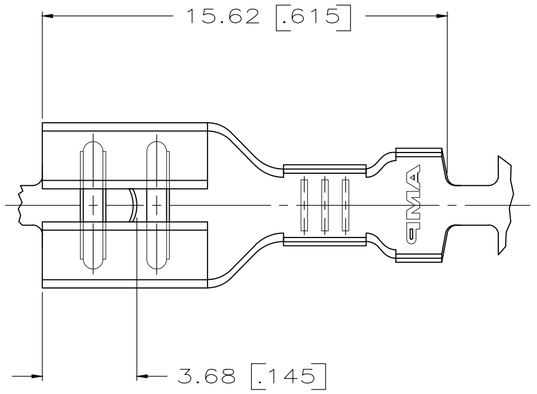

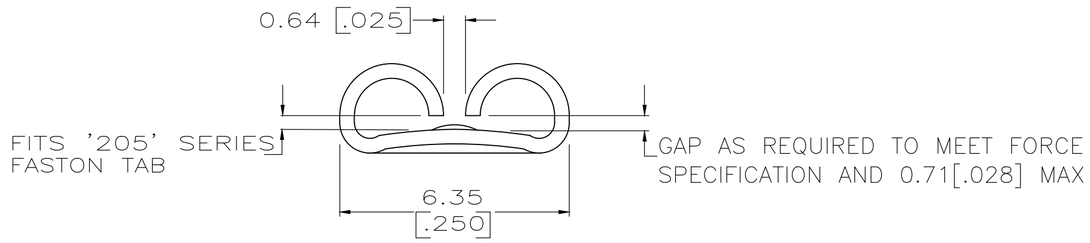

VIEW A–A
SCALE 8:1

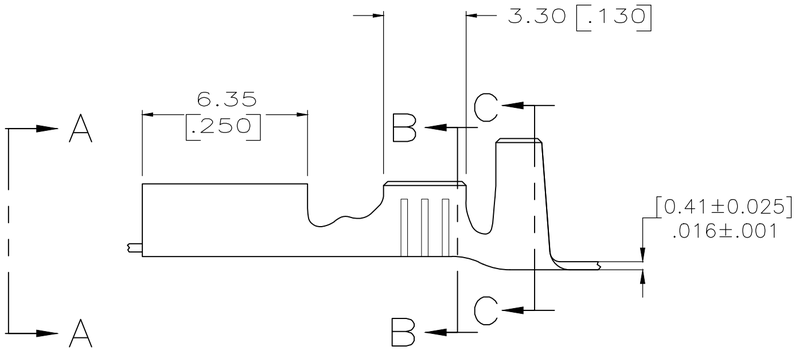

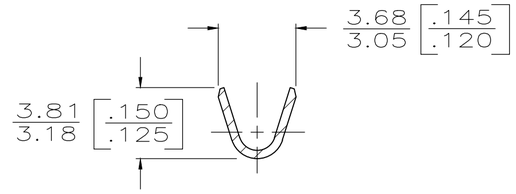

SECTION B–B

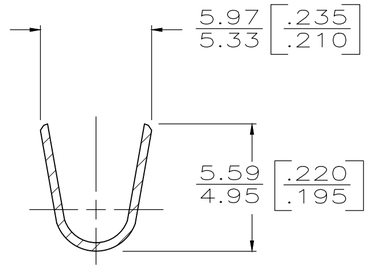

SECTION C–C

INSUL RANGE	WIRE SIZE	FINISH	MATERIAL	MATING TAB THK	PART NO
3.30–4.57 [.130–.180]	0.8–2.0mm² [18–14]	–	#4 PHOS BRZ	0.84–0.76 [.033–.030]	42233–8 OBS
		TIN	#4 PHOS BRZ		42233–7
		SILVER	#4 PHOS BRZ		42233–6
		GOLD	4M BRASS		42233–5 OBS
		GOLD	4M BRASS		42233–4 OBS
		SILVER	4M BRASS		42233–3 OBS
		TIN	BRASS		42233–2
		–	4M BRASS		42233–1 OBS

THIS DRAWING IS A CONTROLLED DOCUMENT.

DIMENSIONS: mm [INCHES]

TOLERANCES UNLESS OTHERWISE SPECIFIED:
0 PLC ± –
1 PLC ± –
2 PLC ± –
3 PLC ± 0.025 .010
4 PLC ± –
ANGLES ± –

MATERIAL: SEE TABLE
FINISH: SEE TABLE

DWN JR RUTH 5/15/89
CHK MS FEHER 5/15/89
APVD MS FEHER 5/15/89
PRODUCT SPEC —
APPLICATION SPEC —
WEIGHT —

TE Connectivity

NAME: RECEPTACLE, FASTON, .205 SERIES –

SIZE	CAGE CODE	DRAWING NO	RESTRICTED TO
A2	00779	C-42233	—

CUSTOMER DRAWING | SCALE 6:1 | SHEET 1 OF 1 | REV W1

42233

1471-9 (3/11)