THIS DRAWING IS UNPUBLISHED. RELEASED FOR PUBLICATION -,- .
© COPYRIGHT - By - ALL RIGHTS RESERVED.

REVISIONS

P	LTR	DESCRIPTION	DATE	DWN	APVD
	D	REVISED PER ECO-15-015252	13NOV15	BJ	FY

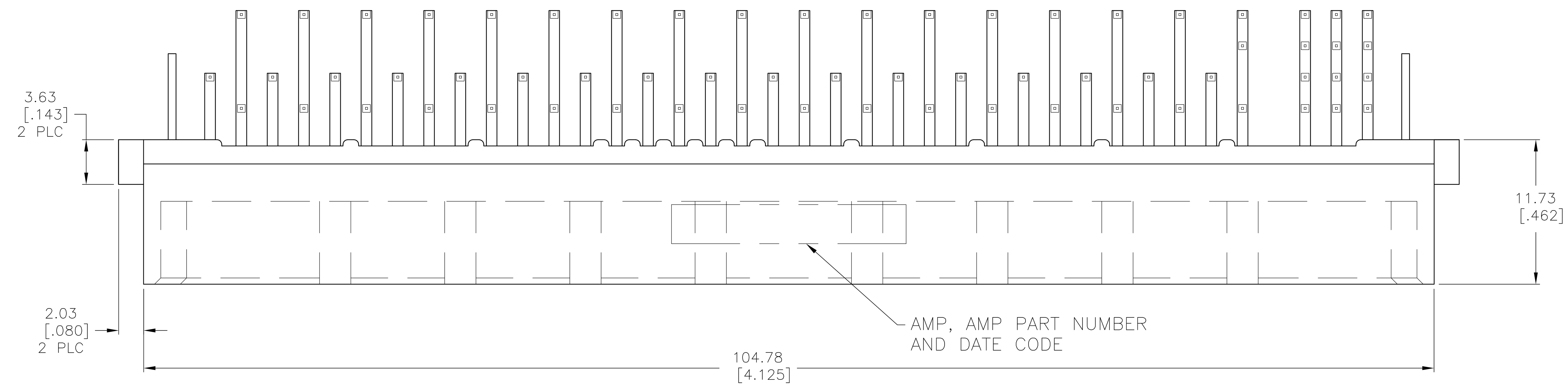

1 HOUSING MATERIAL: THERMOPLASTIC, BLACK.

2 CONTACT MATERIAL: PHOSPHOR BRONZE.

3 FINISH:
MATING AREA: MEETS THE PERFORMANCE REQUIREMENTS OF PRODUCT SPECIFICATION 108-9063; BASED ON TELCORDIA DR-1217-CORE APPLICATIONS IN UNCONTROLLED ENVIRONMENTS.
SOLDER TAILS AREA: TIN-LEAD PLATED.

4 RIGHT ANGLE PIN RECOMMENDED P.C. BOARD HOLE SIZES ARE 0.94-1.09 [.037-.043]; RECOMMENDED PAD DIA IS 1.52 [.060].

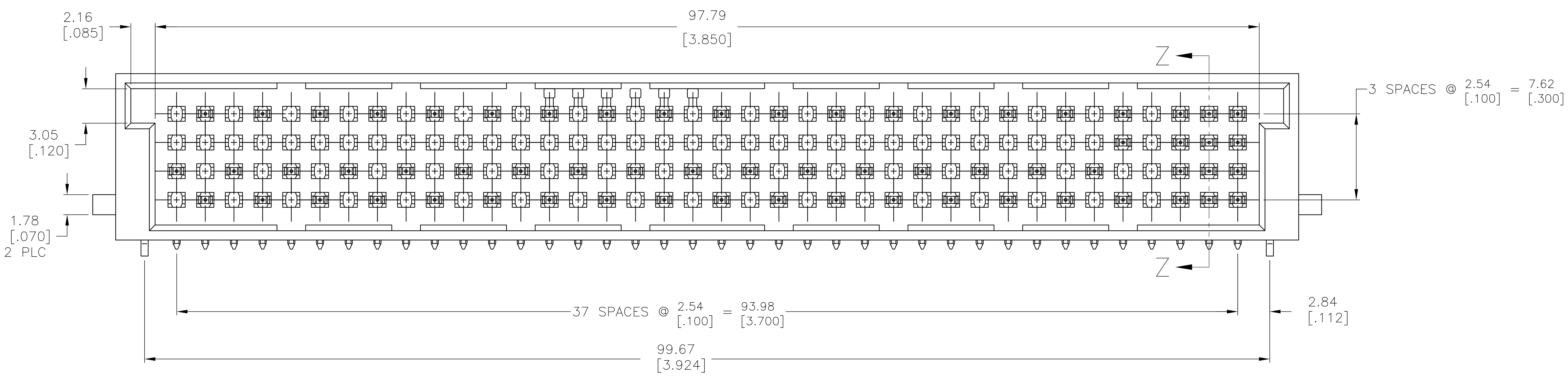

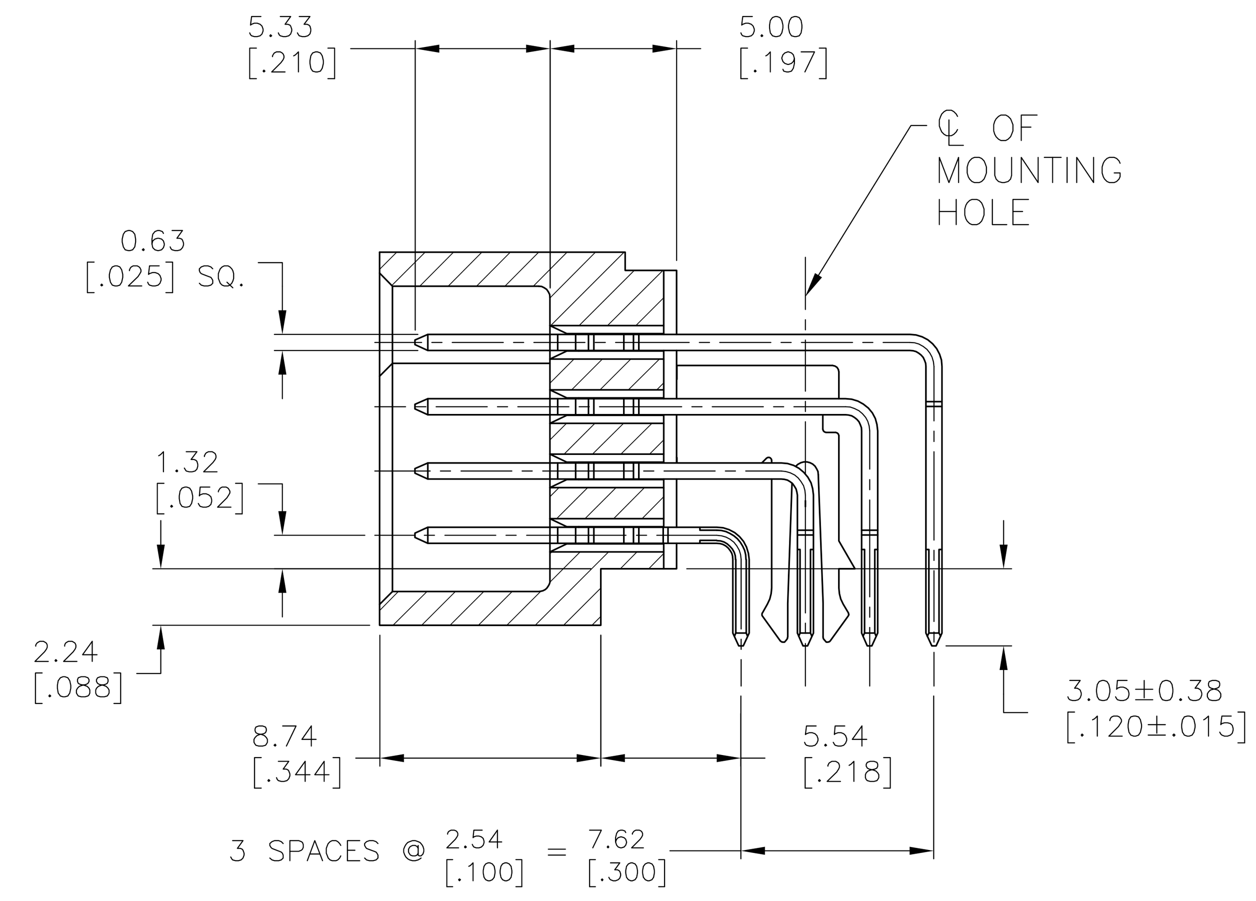

SECTION Z-Z

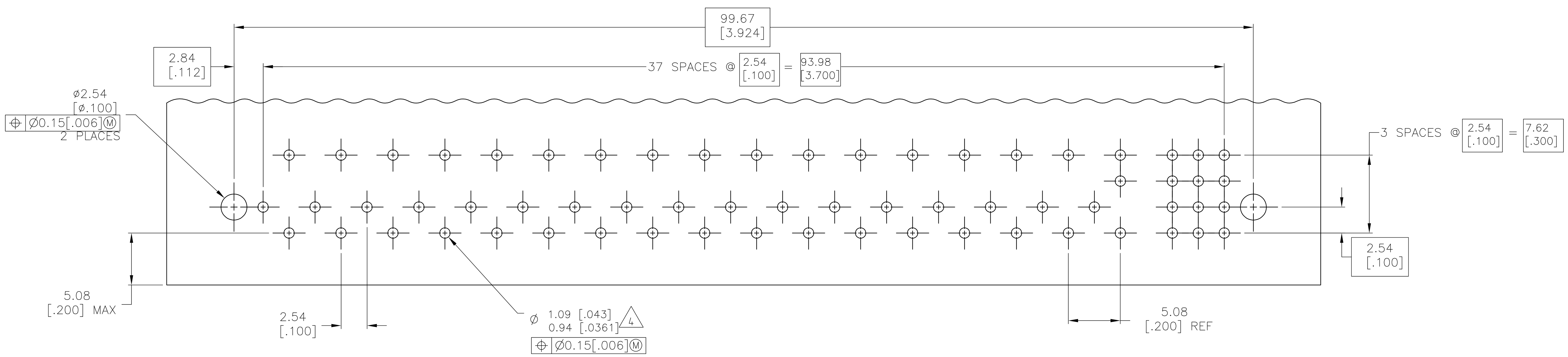

RECOMMENDED P. B. BOARD LAYOUT

A		X		X		X		X		X				X		X		X		X		X		X		X		X		X		X		X		X	X	X	A
B																																		X		X	X	X	B
C	X		X		X		X		X		X		X		X		X		X		X		X		X		X		X		X		X			X	X	X	C
D		X		X		X		X		X		X		X		X		X		X		X		X		X		X		X		X		X		X	X	X	D
ROW	1				5					10					15					20					25					30					35			38	ROW

CONTACT LOADING CHART - X DENOTES LOADED CAVITY

536946-1
PART NUMBER

THIS DRAWING IS A CONTROLLED DOCUMENT.

DWN T. SHUEY 5-6-96
CHK J. WEARY 5-9-96
APVD J. WEARY 5-9-96
PRODUCT SPEC —
APPLICATION SPEC —
WEIGHT —

DIMENSIONS: mm

TOLERANCES UNLESS OTHERWISE SPECIFIED:
0 PLC ± -
1 PLC ± -
2 PLC ± -
3 PLC ± 0.13 [.005]
4 PLC ± -
ANGLES ± -

MATERIAL 1 2
FINISH 3

TE Connectivity

NAME: PIN ASSEMBLY,HDI,4 ROW,RIGHT ANGLE, W/BOARD LOCK,3.05 [.120] LG TAILS

SIZE A1 | CAGE CODE 00779 | DRAWING NO C-536946 | RESTRICTED TO —

CUSTOMER DRAWING | SCALE 4:1 | SHEET 1 OF 1 | REV D

4805 (1/15)