Transfer or duplication of this doucument as well as the utilisation or communication of its content are not permitted unless express consent is granted. Violations give rise to claims for damages. All rights reserved in case of patent, utility model or design patent registrations.

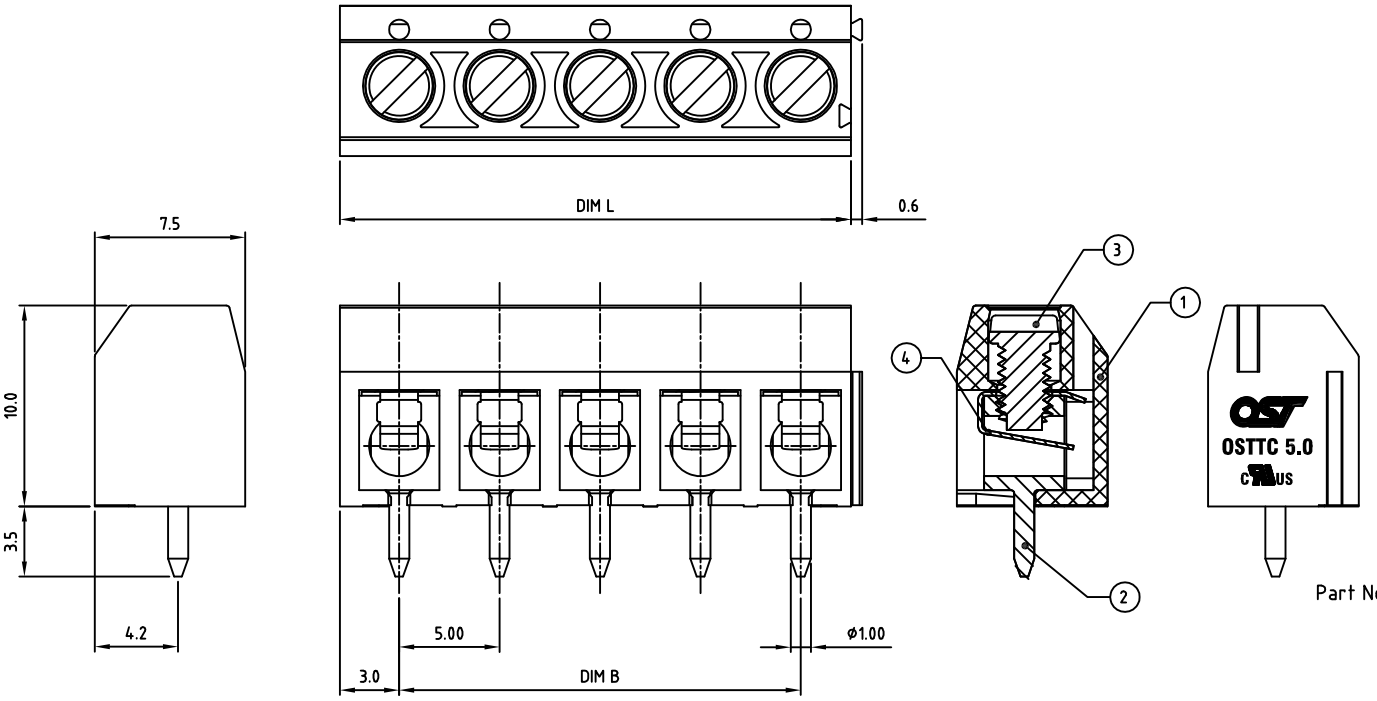

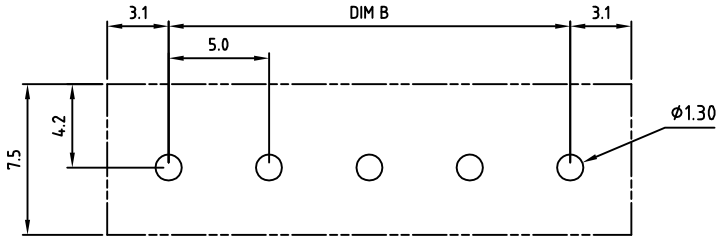

PCB LAYOUT

Technical data

1.Nominal voltage: 300V/15A
PITCH:5.0mm

2.Connection capacity:
AWG 22-14

3.Insulation Withstands Voltage:
AC 1600V/MIN

4.Insulation Resistance:
1000MΩor more at DC500V

5.Tightening torque:
4.6kgf.cm (4.0Lb-in)

6.Screw thread: M2.6

7.Stripping length: 5-6mm

8.Operating temperature range:-40°C ~ 115°C
Soldering temperature:250±10°C /5s

9.Undimensioned Tolerances:

Dim.L=Px5.0
Dim.B=(P-1)x5.0
P= number of poles 2-24P

	Dim B	Dim L
0-30mm	±0.15	±0.20
over 30mm-60mm	±0.20	±0.25
over 60mm-90mm	±0.25	±0.30
over 90mm	±0.30	±0.40

10.Safety approval:

11.RoHS Compliance

Part No.: OSTTCXX0162

No. of Poles
02 2 Poles
03 3 Poles
... ...
24 24 Poles

Nonstandard colors
Mins could apply

COLOR
0: Black
2: Red
3: Orange
4: Yellow
5: Green
6: Blue (Standard)
8: Grey

ITEM	NAME OF PART	MATERIAL	NOTES	Q"TY
4	WIRE GUARD	Stainless steel		P
3	SCREW	STEEL	M2.6×0.4, Zn Plated	P
2	CAGE	BRASS	M2.6×0.4, Tin PLATED	P
1	BODY	PA66 UL94V-0	ALL COLOR	1

DWG.	WF. Zhang	DATE	2017.09.15	UNITS:	MM	SHEET:	1 OF 1
CHK.	WF. Zhang	DATE	2017.09.15	SCALE:	NONE 2.5:1 (:)	REV.: A	
APP.		DATE		TITLE:	OSTTC 5.00mm Series Solid block type		
				PART NO.	OSTTCXX0162		
				DWG NO.	OSTTCXX0162.dwg		

Tolerance: X. ±0.50; X.X ±0.30; X.XX ±0.10; X° ±1°

SIGN	DESCRIPTION	CHK.	DATE
1			

ON-SHORE TECHNOLOGY, INC.