THIS DRAWING IS UNPUBLISHED. RELEASED FOR PUBLICATION -.- .
© COPYRIGHT - BY TYCO ELECTRONICS CORPORATION. ALL RIGHTS RESERVED.

LOC	DIST
AJ	16

REVISIONS

P	LTR	DESCRIPTION	DATE	DWN	APVD
	A	REV PER EC-0S14-0028-05	17DEC05	BC	KW

1. FOR USE WITH AMP PRO-CRIMPER II HAND TOOL, PART # 354940-1, OR WITH THE 626 SERIES PNEUMATIC TOOL WITH ADAPTER #679304-1
2. REQUIRES PRO-CRIMPER II DIE SET PART # 58436-1. FOR CONTACT AND BRAID TERMINATION.
3. REQUIRES PRO-CRIMPER II DIE SET PART # 58485-1. FOR CONTACT AND BRAID TERMINATION.
4. SINGLE PACKED VERSION.

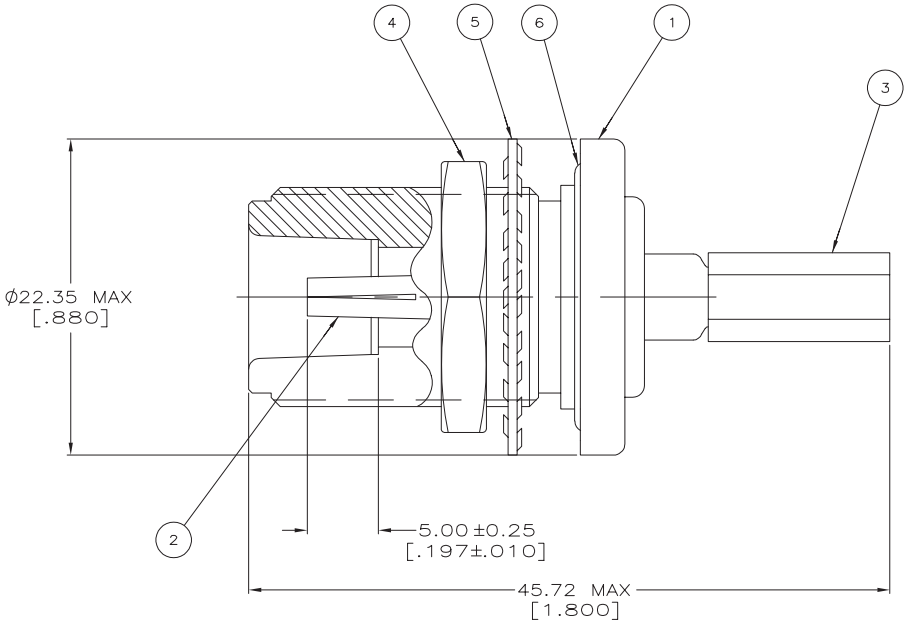

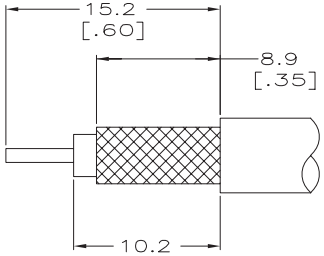

DETAIL C

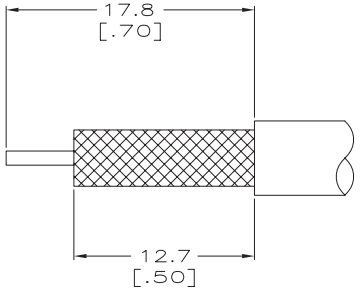

DETAIL D

RECOMMENDED STRIP LENGTHS

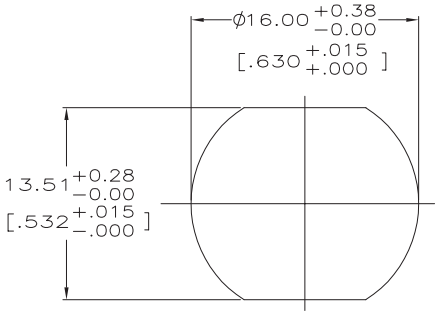

RECOMMENDED PANEL CUTOUT

4 2		RG-142/U, 142A/U &142B/U	CONTACT: .068, BRAID: .213	DETAIL C	22132-3	50687-2	1-332004-7	9-221132-4	415246-8	415249-1	5415248-7
3	OBSOLETE	RG-393/U	CONTACT: .100, BRAID: .429	DETAIL D	22132-3	50687-2	1-332004-7	9-221132-8	1-415247-5	415250-1	5415248-6
2	OBSOLETE	RG-58A/U & 58C/U	CONTACT: .068, BRAID: .213	DETAIL C	22132-3	50687-2	1-332004-7	9-221132-0	415246-8	415249-1	5415248-1
		CABLE	HEX CRIMP HEIGHTS IN INCHES	STRIP LENGTH	6 O-RING QTY=1	5 LOCKWASHER QTY=1	4 JAM NUT QTY=1	3 FERRULE QTY=1	2 CONTACT QTY=1	1 JACK ASSY QTY=1	PART NUMBER

THIS DRAWING IS A CONTROLLED DOCUMENT.

DIMENSIONS: mm [INCHES]

TOLERANCES UNLESS OTHERWISE SPECIFIED:
0 PLC ± -
1 PLC ± 0.4 [.02]
2 PLC ± -
3 PLC ± -
4 PLC ± -
ANGLES ± -

MATERIAL -
FINISH -

DWN G. ATTADIA - DOCK5 01FEB2005
CHK J. HAVENER 01FEB2005
APVD G. MICHAEL 01FEB2005
PRODUCT SPEC —
APPLICATION SPEC —
WEIGHT —

tyco Electronics
Tyco Electronics Corporation
Harrisburg, PA 17105-3608

NAME BULKHEAD JACK, SERIES N

SIZE A2 | CAGE CODE 00779 | DRAWING NO C-5415248 | RESTRICTED TO —

CUSTOMER DRAWING | SCALE 4:1 | SHEET 1 OF 1 | REV A

5415248

AMP 1471-9 REV 31MAR2000