LOADING PATTERN MATING SIDE

	01				05				10				15				20				25
y	0	0	0	0	0	0	0	0	0	0	0	0	0	0	0	0	0	0	0	0	0
h	6	6	6	6	6	5	5	5	5	5	5	5	5	5	5	5	5	5	5	5	5
g	6	6	6	6	6	5	5	5	5	5	5	5	5	5	5	5	5	5	5	5	5
f	6	6	6	6	6	5	5	5	5	5	5	5	5	5	5	5	5	5	5	5	5
e	6	6	6	6	6	5	5	5	5	5	5	5	5	5	5	5	5	5	5	5	5
d	6	6	6	6	6	5	5	5	5	5	5	5	5	5	5	5	5	5	5	5	5
c	6	6	6	6	6	5	5	5	5	5	5	5	5	5	5	5	5	5	5	5	5
b	0	5	5	5	5	5	5	5	5	5	5	5	5	5	5	5	5	5	5	5	5
a	6	6	6	6	6	5	5	5	5	5	5	5	5	5	5	5	5	5	5	5	5
z	0	0	0	0	0	0	0	0	0	0	0	0	0	0	0	0	0	0	0	0	0

POS

LOADED CONNECTOR ASSEMBLY
(FOR EXAMPLE)

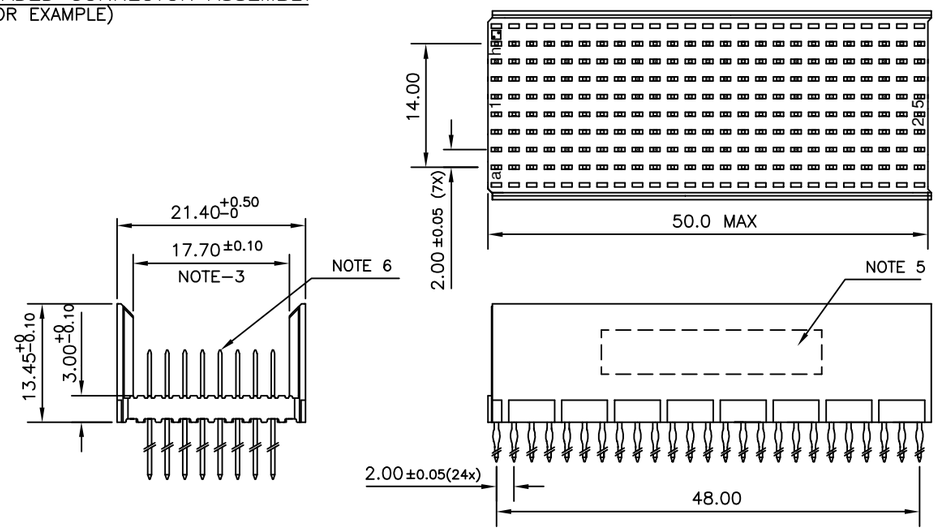

CONTACT OVERVIEW

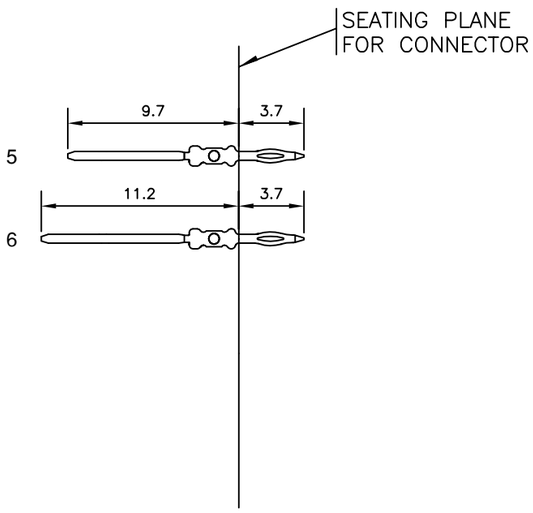

LAY−OUT P.C.B.−HOLE

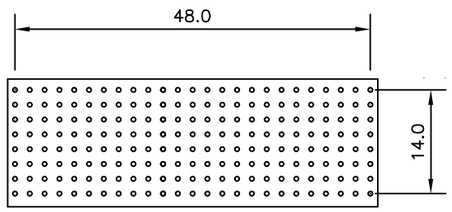

HM2P88PDH1G0- - -

LEAD FREE INDICATOR : LF = LEAD FREE
(DIGIT 15 & 16)

PLATING CODE (DIGIT 13 AND 14)
(REF DRW NO. BS,C , 201844 , 003)

NOTES

1. THIS PRODUCT IS CSA APPROVED.
2. THIS PRODUCT IS UL RECOGNIZED.
3. MEASURED AT THE BOTTOM.
4. MATERIAL CONTACT: PHOSPHORBRONZE
   HOUSING: CREAM WHITE GLASS FILLED POLYESTER UL-94V0
5. CONNECTOR PRINTED WITH P/N AND DATE CODE.
6. FOR ACTUAL CONTACT LOADINGS, SEE LOADING PATTERN MATING SIDE.
7. SHAPE OF CONNECTOR HOUSING CAN ALTER DEPENDING ON PRODUCTION LOCATION
8. THE PRODUCT (LF) MEETS EUROPEAN UNION DIRECTIVES AND OTHER COUNTRY REGULATIONS AS DESCRIBED IN GS-22-008
9. FOR RECOMMENDED PTH DIMENSIONS REFER DRAWING : BS, A , 201572 , 001

CATALOG NO: HM2P88PDH1G0- - - -

ltr	ecn no	dr	date
A	I04-0011	MNI	2004/02/17
B	I05-0187	MNI	2005/10/13
C	I06-0090	MNI	2006/06/26

dr	MNI K VANDANATH	2004/02/17
engr	BIJU K PAUL	2004/02/17
chr	BIJU K PAUL	2006/06/26
appd	BIJU K PAUL	2006/06/26

mat'l. code: SEE NOTE 4
surface: ISO 1302
tolerance: ISO 406 ISO 1101
tolerances unless otherwise specified: angles 0°±1°; linear .0±0.2; .00±0.1
projection
MM
scale –
product family: MILLIPACS
title: MPACS 8+2R STR HDR PF CONN TYPE E
dwg no: BS, C ,203028,114
sheet 1 of 1
size A3
type: Product Customer Drawing
sheet index: revision C; sheet 1

form: A3

FCIconnect.com
Copyright FCI