THIS DRAWING IS UNPUBLISHED. RELEASED FOR PUBLICATION 1997
© COPYRIGHT 1997 BY TYCO ELECTRONICS CORPORATION. ALL RIGHTS RESERVED.

LOC	DIST
A1	–

REVISIONS

P	LTR	DESCRIPTION	DATE	DWN	APVD
	B4	Released as per ECR-07-019955	22.08.07	SK	TS

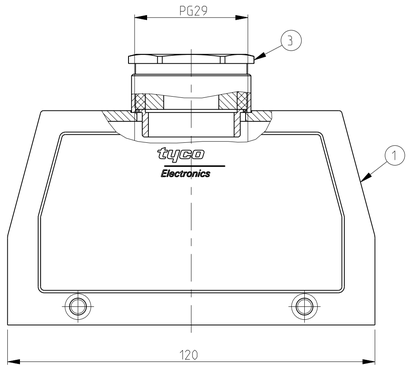

PN 1-6

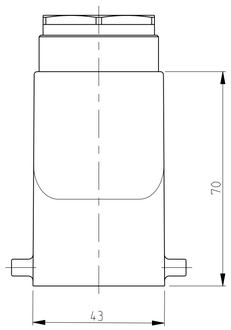

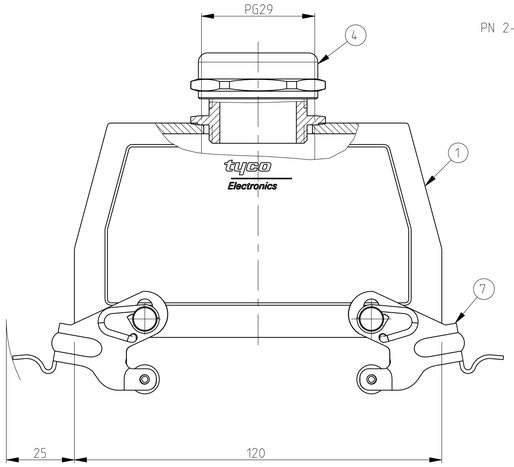

PN 2-1

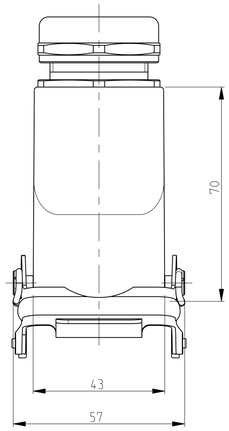

NOTES.

1 Material:Housing:Aluminium Diecasting Alloy

2 Surface:Varnish grey

3 Varnish on the inside not necessary

4 Packaging
Quantity 5 Pieces in a box

PN 2-6

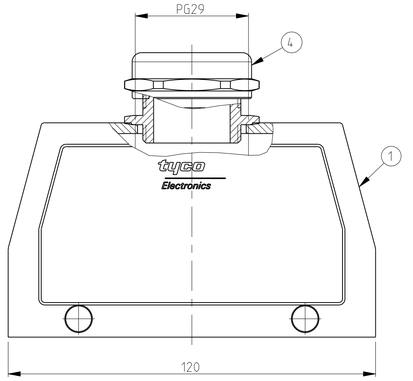

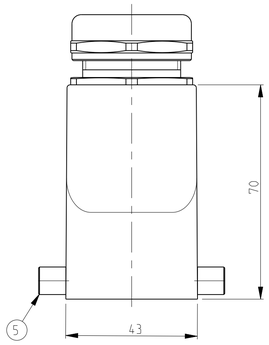

PN 1-7

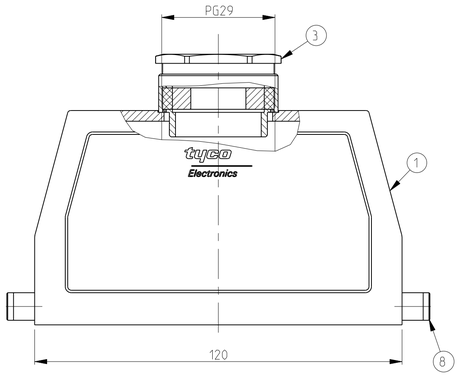

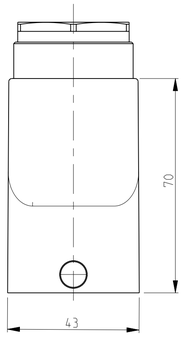

PN 2-1

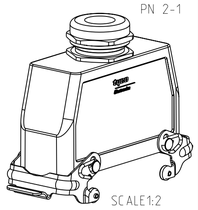

SCALE1:2

PN 1-7

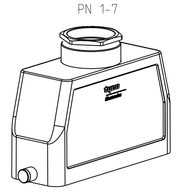

SCALE1:2

PN 1-6

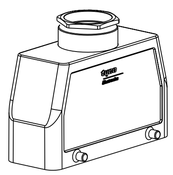

SCALE1:2

PN 2-6

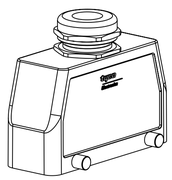

SCALE1:2

PN 1-1

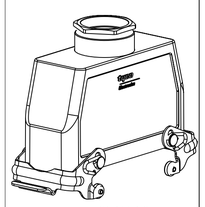

SCALE1:2

PN 1-1

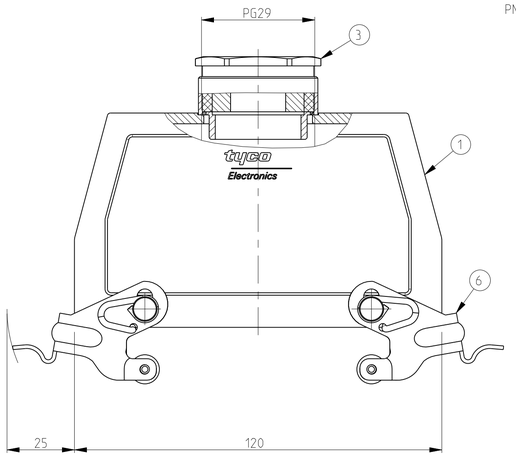

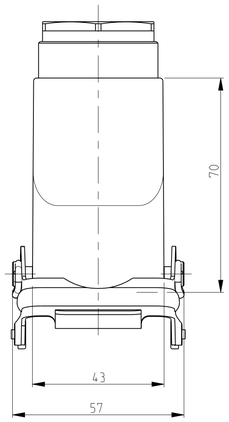

OBSOLETE	OBSOLETE	OBSOLETE												
1									ZB-Central clip	Stainless steel	-		11	
	1								ZB-Central clip	Steel	Zinc plated	Blue	10	
		2							LB-Clip bolt	Stainless steel	-		9	
			2						LB-Clip bolt	Steel	Zinc plated	Blue	8	
				2					VS-Side clip	Stainless steel	-		7	
					2				VS-Side clip	Steel	Zinc plated	Blue	6	
						4			VS-Clip bolt	Stainless steel	-		5	
1		1		1		1			HUT-Gland fitting Pg29	Brass	Nickel plated		4	
	1		1		1		1		PG-Gland fitting Pg29	Brass	Nickel plated		3	
1		1		1		1			Hood HB.24.Pg.1.29	Aluminium	Aluminium oxide	Black	2	
	1		1		1		1		Hood HB.24.Pg.1.29	Aluminium	-	Grey	1	
2-3	1-3	2-7	1-7	2-1	1-1	2-6	1-6		DESCRIPTION	MATERIAL	SURFACE	COLOR	ITEM NO	REMARKS

ORDERING TEXT

HB.24.Sto.1.29

HB.-K.24.Sto.1.29

HB24.Sto-VS.1.29

HB.-K.24.Sto-VS.1.29

HB.24.Sto-GR.1.29

~~HB-K.24.Sto-GR.1.29~~

~~HB-Z.24.Sto.1.29~~

~~HB-K/Z.24.Sto-ZB.1.29~~

THIS DRAWING IS A CONTROLLED DOCUMENT FOR TYCO ELECTRONICS CORPORATION IT IS SUBJECT TO CHANGE AND THE CONTROLLING ENGINEERING ORGANIZATION SHOULD BE CONTACTED FOR THE LATEST REVISION.

DIMENSIONS: mm

TOLERANCES UNLESS OTHERWISE SPECIFIED:
• ISO 2768-mK
• DIN 16901-120

0 PLC	±	
1 PLC	±	
2 PLC	±	
3 PLC	±	
4 PLC	±	
ANGLES	±	

MATERIAL –

FINISH –

DWN Schweiger 17.07.1997
CHK Schnurfeil 17.07.1997
APVD –

PRODUCT SPEC 108-74001 108-74003
APPLICATION SPEC 114-74001 114-74004
WEIGHT –

Tyco Electronics

Tyco Electronics,AMP.GmbH
D-53819.Neunkirchen.Germany

NAME Hood HB.24

SIZE	CAGE CODE	DRAWING NO	RESTRICTED TO
A1	00779	C-1102326	–

CUSTOMER DRAWING

SCALE 1:1 SHEET 1 OF 1 REV B4

AMP 4805 REV 31MAR2000

Pro/ENGINEER DRAWING