Bottom View of Assembly

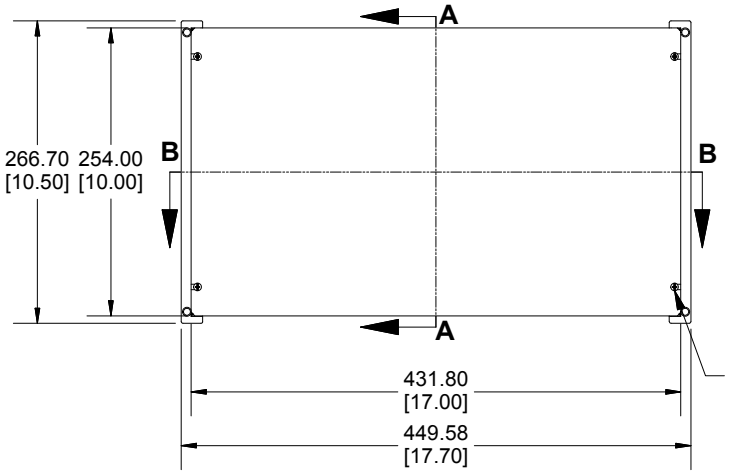

SECTION A-A
End View of Assembly

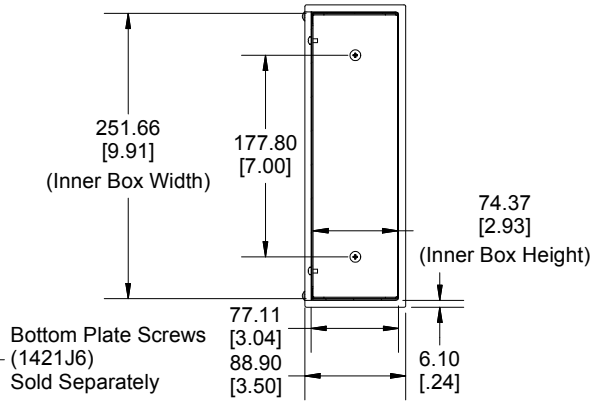

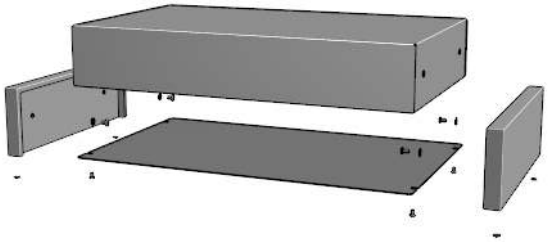

SECTION B-B
Side View of Assembly

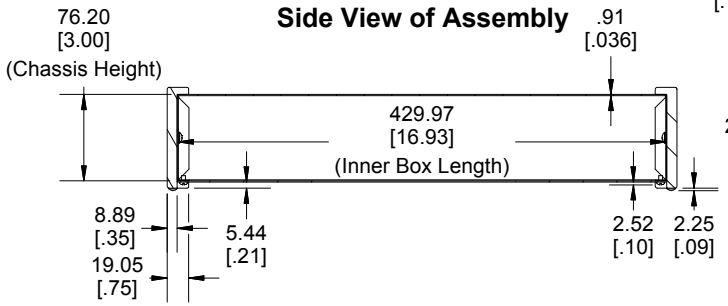

Bottom View of Chassis Assembly
(Sold Separately)

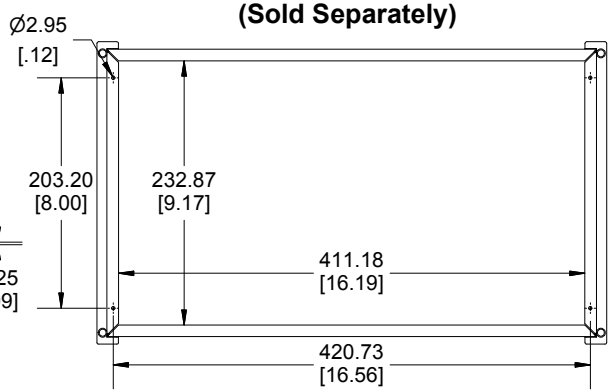

Bottom Plate
(Sold Separately)

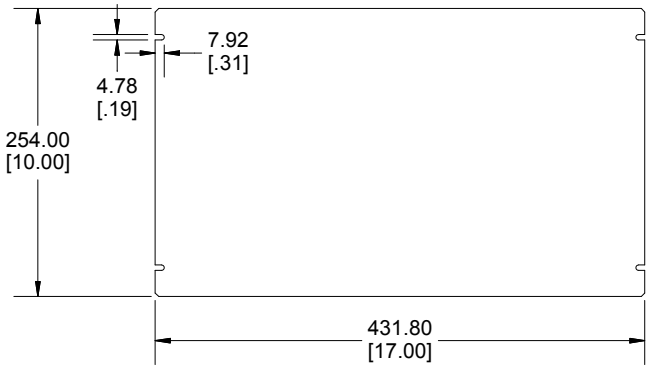

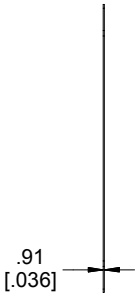

Enclosures can be Factory Modified (Milling, Drilling, Printing etc.)
Contact Factory mjm@hammondmfg.com for quotes
Solid models of this enclosure available in STEP or IGES.

NOTE
Chassis Includes Wooden Sides, Adhesive Rubber Feet and Required Hardware
Chassis is Made of 0.036" Steel.
Bottom Plate is Made of 0.036" Steel. (Sold Separately)
Screws should not be torqued past 4.43 lbf.in (50 cN.m)

PART NUMBERS	
1441-32BK3CWW Enclosure	
Satin Black Chassis	1441-32BK3CWW
ACCESSORIES	
Satin Black Bottom Plate	1431-30BK3
Black Cover Screws (Pkg 6) [6-32 x 1/4" Self-Tapping Screws]	1421J6BK
Clear Self-Adhesive Rubber Feet (Pkg 24)	1421T6CL

Dimensions:
mm
[inches]

HAMMOND MANUFACTURING™

1441-32CWW

www.hammondmfg.com