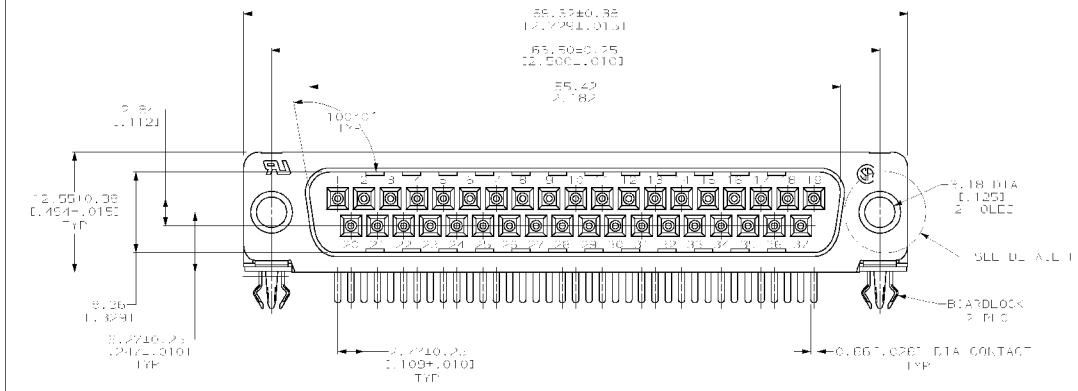

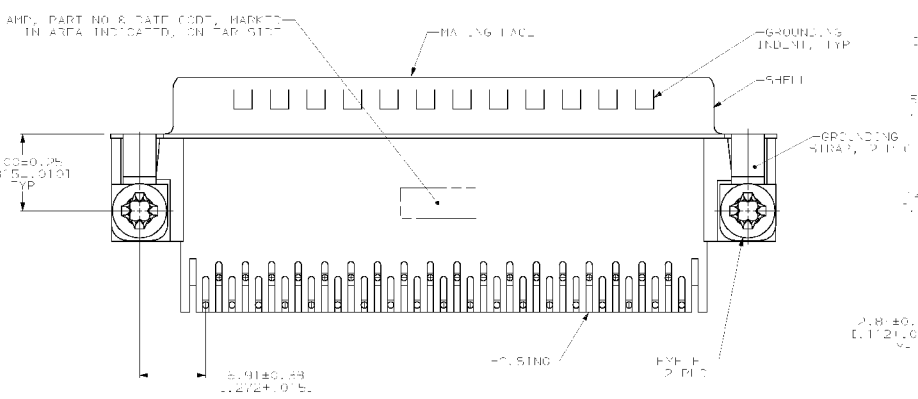

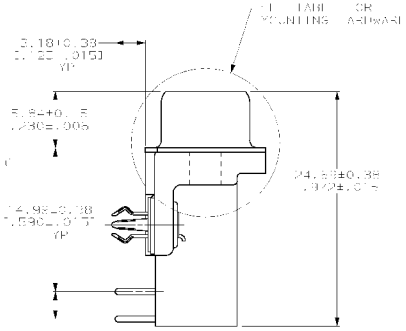

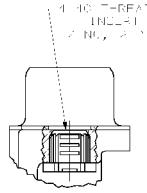

DETAIL D

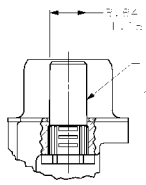

DETAIL E

FOR 5 AND 6 ONLY

DETAIL F
2 PLC

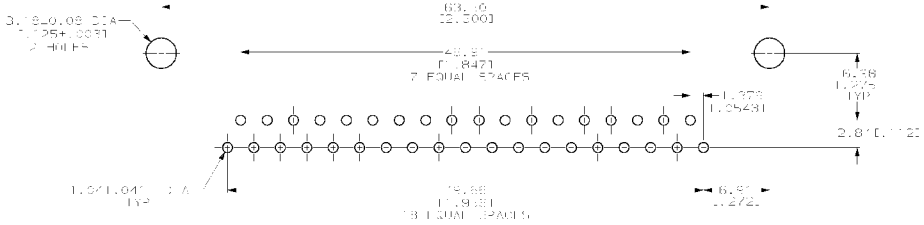

RECOMMENDED PCB BOARD MOUNTING HOLES
P.C. BOARD THICKNESS: 1.57[.062]

OBSOLETE	1 DIA SEE DETAIL D SEE DETAIL E			747835-7 747835-6 747835-5
	4-40 DIA			747835-4
UPGRADE TO 747835-4 OBSOLETE OBSOLETE	1 DIA -			747835-3 747835-2 747835-1
	MOUNTING HARDWARE	BOARDLOCK PINS	CONTACT PINS	PART NUMBER

AMP
AMP INCORPORATED
HARRISBURG, PA 17105-3608

TITLE: ASSMBLY, SIZE 2, STYLE DIN, 2.640 ANGLE, FROM METAL SHELL, .050 SERIES, SOLDERCLICK, AMPLIMITE HDP 20

DWG NO: 747835-7
SCALE: 2:1
SHEET 1 OF 1