1 OBSOLETE PARTS: OBSOLETE CIS STREAMLINING PER D.RENAUD/D.SINISI

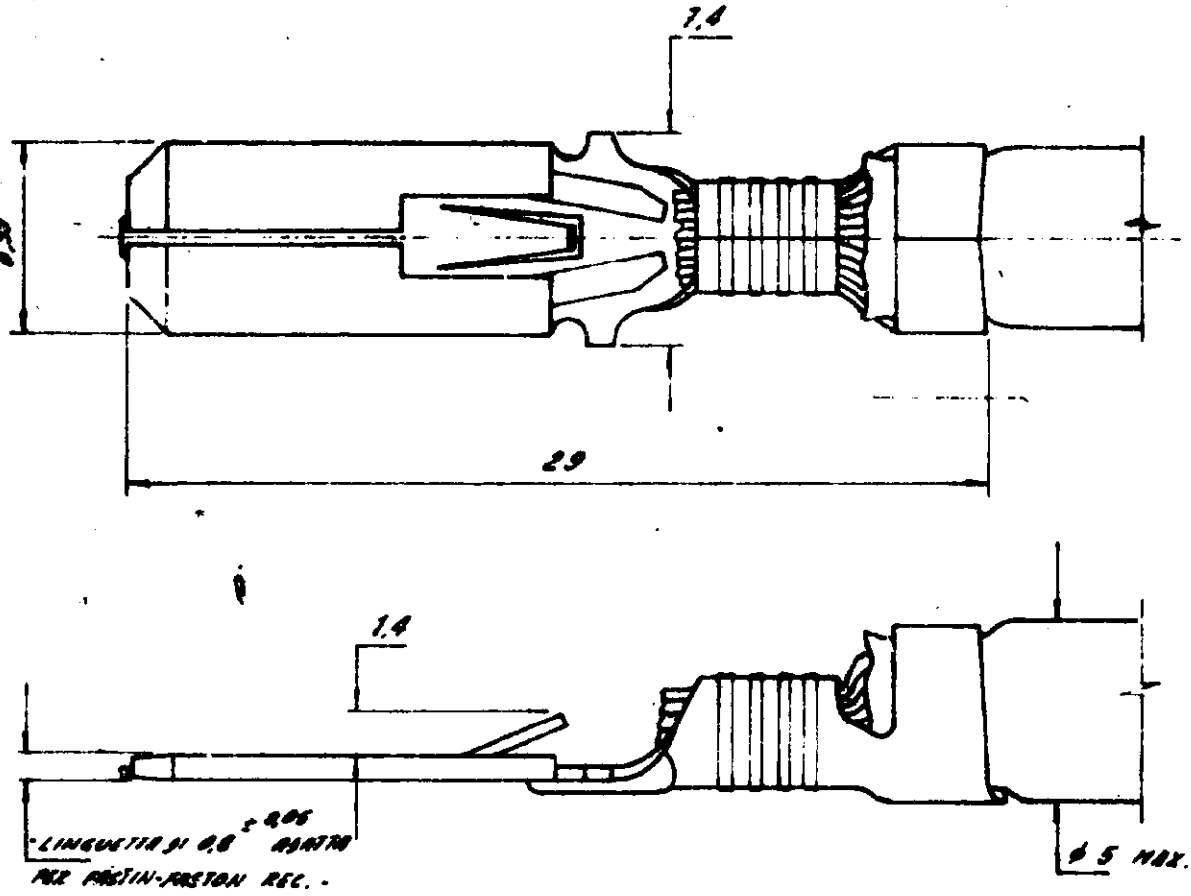

MATERIALE E FINITURA	NUMERO LOOSE PIECE	
[illegible]	180409-[illegible]	
[illegible] STAGNATO	180409-2	
~~BRONZO FOSFOROSO~~	~~180409-3~~	OBSOLETE 1
~~BRONZO FOSFOROSO MAGNETICO~~	~~180409-4~~	OBSOLETE
~~BRONZO FOSFOROSO STAGNATO~~	~~180409-5~~	OBSOLETE 1
[illegible] MAGNETICO	180409-6	

01	REVISED PER ECO-09-026346	KK	AEG	26NOV 09

© 2001 AMP INCORPORATED ALL RIGHTS RESERVED. AMP IS A TRADEMARK OF TYCO INTERNATIONAL. PATENTS AND/OR PATENTS PENDING

CUSTOMER COPY
REFERENCE ONLY

MATERIAL AND FINISH: SEE TABLE

WIRE RANGE: 4-6 mm²

INSULATION

CLASS: WIRE TERM REC

TYPE: AUTO MACH

DRAWN | DR | CHK | DATE

TOLERANCE EXCEPT AS NOTED: ±0.4

SCALE: 4:1

SHEET 1 | A | NO C-180403 | REV 01

NAME: .250 SERIES FASTIN TAB

AMP