DRAWING MADE IN THIRD ANGLE PROJECTION

© COPYRIGHT 1965 BY AMP INCORPORATED, HARRISBURG, PA. ALL INTERNATIONAL RIGHTS RESERVED. AMP INCORPORATED PRODUCTS COVERED BY U. S. AND FOREIGN PATENTS AND/OR PATENTS PENDING.

LOC AF | DIST 50

REVISIONS

| P | F | ZONE | LTR | DESCRIPTION | DATE | APPROVED |
|---|---|---|---|---|---|---|
| ✓ | ✓ | | S | REDRAWN & REVISED A-3943 | 4/26/78 | |
| | ✓ | | T | REV PER AF-6785 | 6/20/90 | PMF |

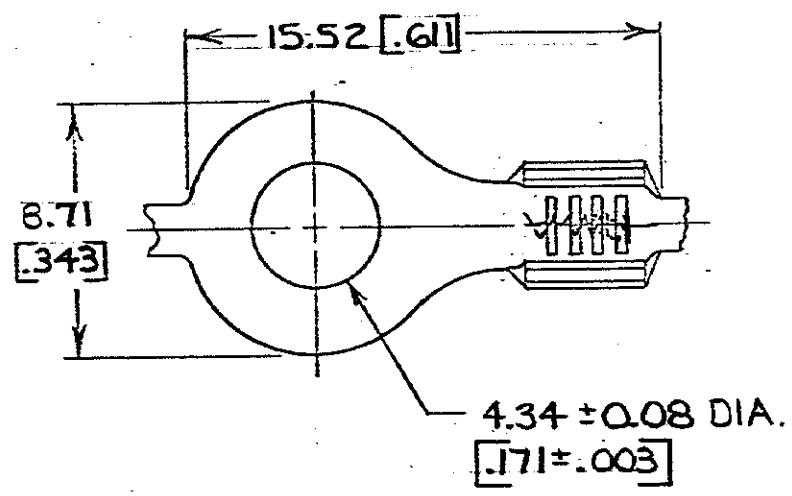


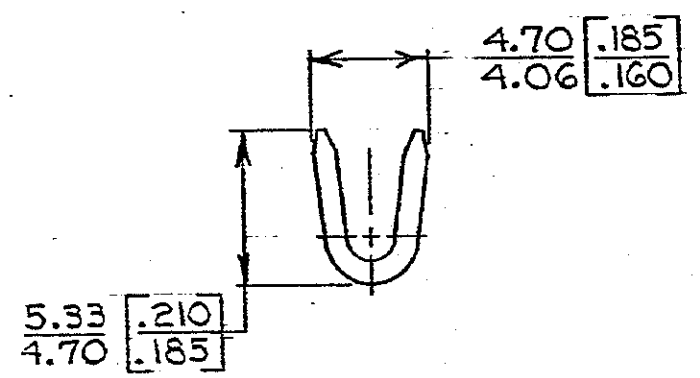


SECT A-A

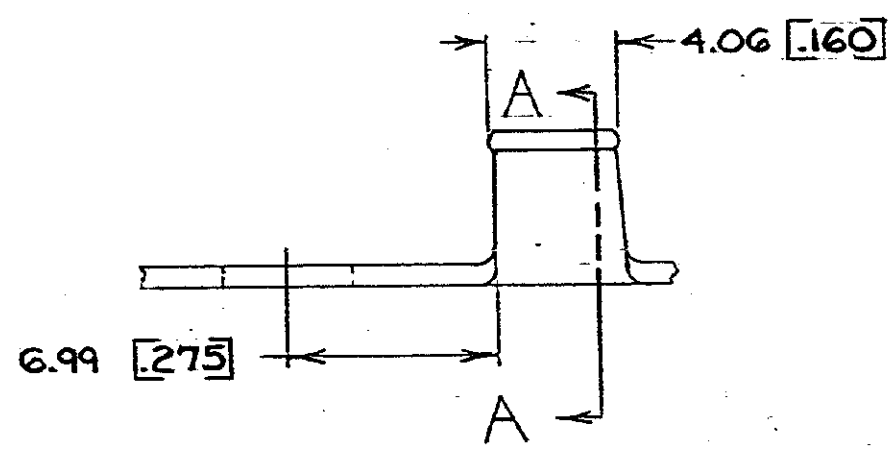


1. CONTINUOUS STRIP, ON REELS.
2. DIMENSIONS IN BRACKETS ARE IN INCHES.

| STUD SIZE | WIRE SIZE | FINISH | MATERIAL | PART NO |
|---|---|---|---|---|
| M4 #8 | 0.8-2.0mm² [18-14] | TIN | 0.76 [.030] BRASS | 40517 |

UNLESS OTHERWISE SPECIFIED DIMENSIONS ARE IN mm
TOLERANCES ON: DECIMALS ±0.38 [.015] ANGLES 1°0'

MATERIAL: SEE TABLE

FINISH: SEE TABLE

CONTRACT NO

DR 4-26-78

CHK 7-19-78

APPD 8-1-78

APPD 8-1-78

DSGN APPD

OTHER APPD

AMP INCORPORATED Harrisburg, Pa.

NAME: RING

| SIZE | CODE IDENT NO | DRAWING NO |
|---|---|---|
| B | 00779 | 40517 |

SCALE | SHEET

**METRIC**

AMP 1470-15 (7-73)

**CUSTOMER DRAWING**