PRODUCT NO.	REMARKS	DIM 'W'	DIM 'X'	DIM 'Y'	DIM 'Z'	DIM 'E'	DIM 'F'
59335-001	–	2,69	13,00	0,40	0,65	1,95	2.40
59335-001LF	LEADFREE (3b) & (5)						
59335-011	–	2,56	12,74	0,40	0,65	0,95	3,36
59335-011LF	LEADFREE (3b) & (5)						

NOTE
1. THIS PRODUCT MEETS THE SATA SPEC REV.1.0a
2. MATERIAL
   i) HOUSING : HIGH TEMPERATURE THERMOPLASTIC UL94V-0
   ii) TERMINAL : COPPER ALLOY
   iii) HOLD DOWN : COPPER ALLOY
3a. FINISH P/N : 59335-0X1
   i) TERMINAL : Au PLATING AT CONTACT POINT
      Sn-Pb PLATING AT SOLDER TAIL WITH NICKEL UNDERPLATE
   ii) HOLD DOWN : Sn-Pb PLATING
3b. LEADFREE FINISH P/N : 59335-0X1LF
   i) TERMINAL : Au PLATING AT CONTACT POINT
      Sn PLATING AT SOLDER TAIL WITH NICKEL UNDERPLATE
   ii) HOLD DOWN : Sn PLATING
4. THE HOUSING WILL WITHSTAND EXPOSURE TO 260-C PEAK TEMPERATURE FOR 10 SECONDS IN A CONVECTION, INFRA-RED OR VAPOR PHASE REFLOW OVEN.
5. FOR P/N: 59335-XXXLF, THIS PRODUCT MEETS EUROPEAN UNION DIRECTIVES AND OTHER COUNTRY REGULATIONS AS DESCRIBED IN GS-22-008.

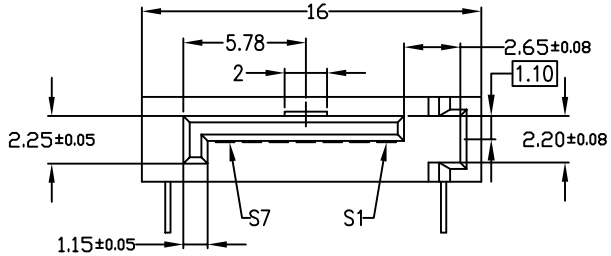

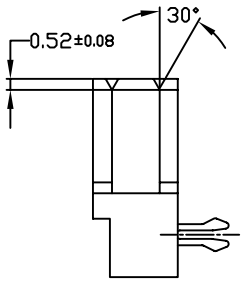

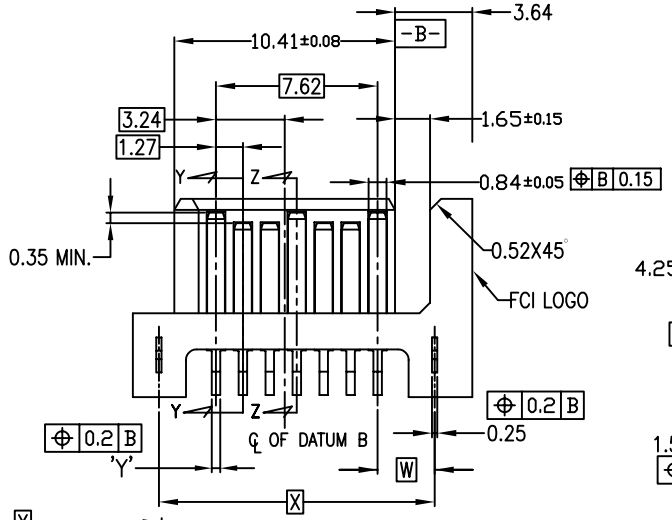

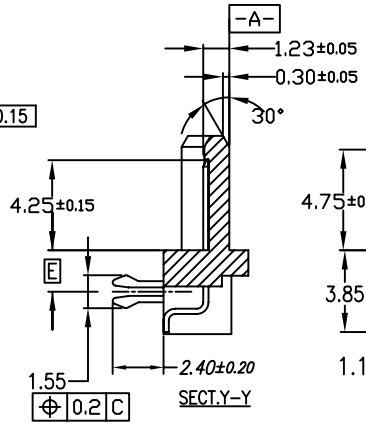

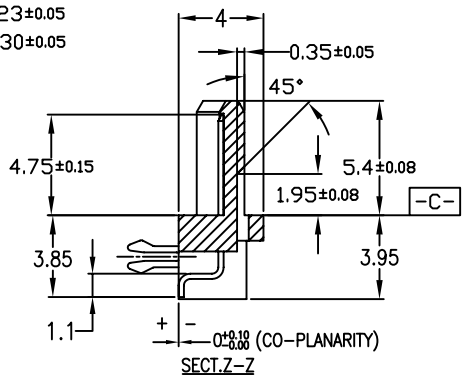

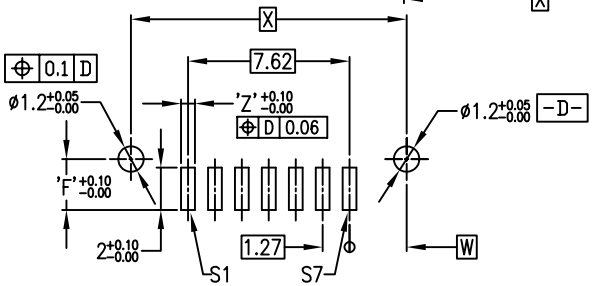

RECOMMENDED MOUNTING LAYOUT
RECOMMENDED PCB T : 1.6mm
TOLERANCE UNLESS OTHERWISE:±0.1

CONFIDENTIAL

mat'l. code SEE NOTE				tolerances unless otherwise specified			CUSTOMER COPY	FCI www.fciconnect.com
ltr	ecn no	dr	date					
A	S03-0057	JPEH	04/15/03	linear	±0.2		projection	title S-ATA SIGNAL PLUG SMT HORIZ. TYPE ASS'Y
B	S04-0170	JPEH	08/04/04					
C	S04-0244	GLL	11/16/04	angles	0° ±2°			
				dr	JPEH	04/15/03	MM	product family SATA / code –
				engr	JPEH	04/15/03		size A / dwg no 59335
				chr	GL LOO	11/16/04	scale 3/1	sheet 1 of 1
				appd	JOEY NG	11/16/04		
sheet index	revision sheet							

cage code 22526

Tous droits strictement reserves. Reproduction ou communication a des tiers interdite sous quelque forme que ce soit sans autorisation ecrite du propietaire. Propriete de c FCI. Droits de reproduction FCI.

All rights strictly reserved. Reproduction or issue to third parties in any form whatever is not permitted without written authority from the proprietor. Property of FCI. Copyright FCI.

ACAD

PDM: Rev:C STATUS:Released Printed: Mar 11, 2011