THIS COPY IS PROVIDED ON A RESTRICTED BASIS AND IS NOT TO BE USED IN ANY WAY DETRIMENTAL TO THE INTERESTS OF PANDUIT CORP.

PANDUIT PART NO. *	WEIGHT
FMWR-C	.80 LB/100 PCS (360 g/100 PCS)

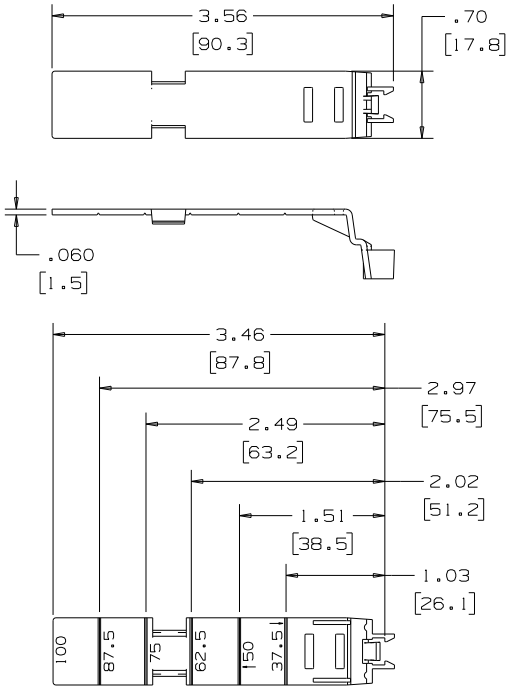

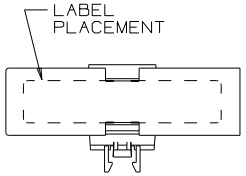

DETAIL "A"

NOTES:

* 1. SEE CURRENT CATALOG FOR ADDITIONAL PART NUMBER SUFFIXES TO INDICATE COLOR AND OR PACKAGE QUANTITY.

A 2. THIS PART ACCOMMODATES METRIC "MC" DUCT WIDTHS: 37.5, 50, 62.5, 75, 87.5, AND 100.

3. THIS PART ALSO PROVIDES AS AN "MC" DUCT LABELING DEVICE AS SHOWN IN DETAIL "A". USED TO IDENTIFY BOTH WIRES EXITING DUCT AND ADJACENT TERMINATIONS.

4. DIMENSIONS IN PARENTHESES ARE IN METRIC.

REV	DATE	BY	CHK	DESCRIPTION	ECN - R		CUST	SUP
1	11-11-09	UCST	MRJS	A. CHANGED NOTES AND TITLEBLOCK: WAS "F" NOW "MC"	34518-28	HIW	HIW	
R	12-14-93	DW	CEF	RELEASED TO PRODUCTION	34518-28	CEF	CEF	

CAD FILENAME/LAYERS: D34518EH_DC_FMWR/00B

PANDUIT CORP. TINLEY PARK, ILLINOIS

WIRE RETAINER (FMWR-C)
FOR METRIC "MC" DUCT
CUSTOMER DRAWING

A

UNLESS OTHERWISE SPECIFIED, DIMENSIONAL TOLERANCES ARE:
(.X) ± (.XXX) ± .010(.3)
(.XX) ± .03(.8) ANGLES ±

UNLESS OTHERWISE SPECIFIED, ALL DIMENSIONS ARE GIVEN IN INCHES, THIRD ANGLE PROJECTION.

DRAWN BY: DW
DATE: 12-14-93
CHK'D: CEF
MAT'L: POLYVINYL CHLORIDE
SCALE: NONE
DRAWING NO.: 34518-28
DWG SIZE: A