© 2020 TE Connectivity. All Rights Reserved.

FILS ADMISSIBLES (ACCEPTABLES WIRES)	
JAUGE (AWG) SECTION / 7 BRINS (7 STRANDS)	24 0.22mm^2
ISOLANT: ØMAX / MATIERE (INSUL.: Ø MAX / MAT'L)	Ø1.2 / PVC

REVISIONS

P	LTR	DESCRIPTION	DATE	DWN	APVD
	D2	PART STATUS UPDATED	03JAN2020	SS	PS

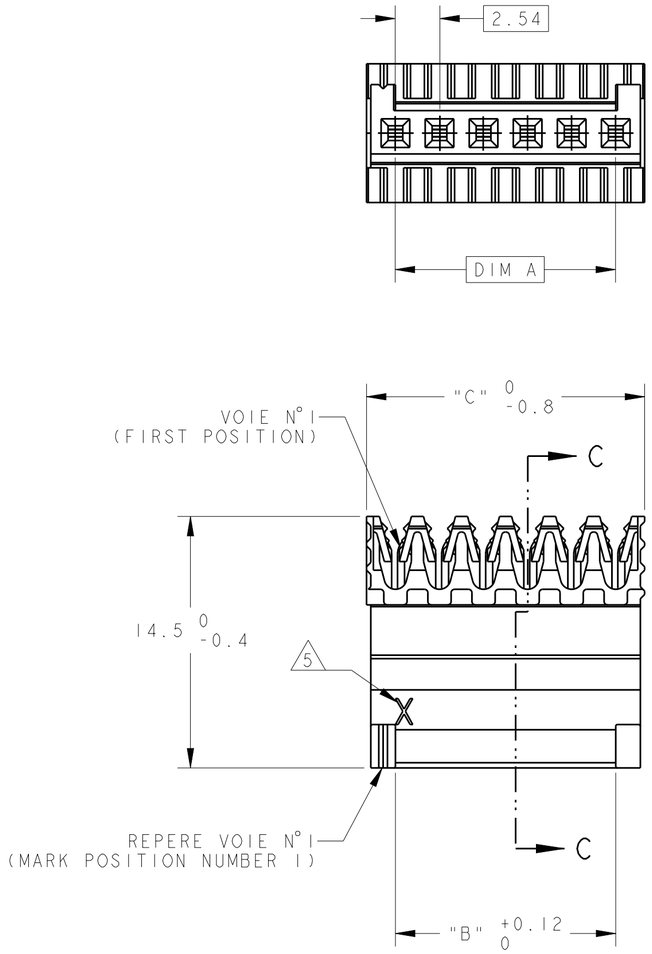

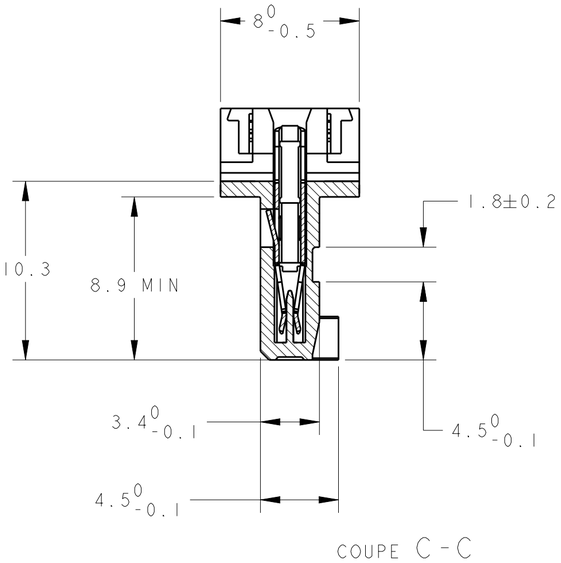

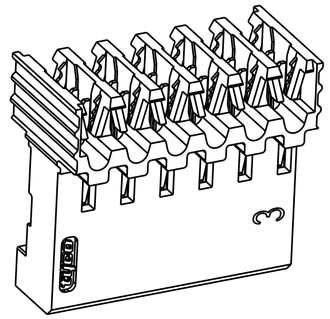

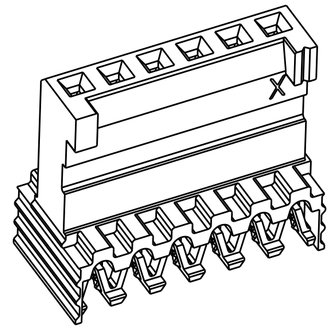

QUANT/ TUBE	C	A,B	Nb DE POS	4	VRAC (L.P.)
	DIMENSIONS			REFERENCES (PART No)	
7 ~~9~~	~~64.30~~	~~60.96~~	~~25~~	~~2-281708-5~~	~~2-144270-5~~
7 ~~9~~	~~61.76~~	~~58.42~~	~~24~~	~~2-281708-4~~	~~2-144270-4~~
7 ~~10~~	~~59.22~~	~~55.88~~	~~23~~	~~2-281708-3~~	~~2-144270-3~~
7 ~~10~~	~~56.68~~	~~53.34~~	~~22~~	~~2-281708-2~~	~~2-144270-2~~
7 ~~10~~	~~54.14~~	~~50.80~~	~~21~~	~~2-281708-1~~	~~2-144270-1~~
7 ~~11~~	~~51.60~~	~~48.26~~	~~20~~	~~2-281708-0~~	~~2-144270-0~~
7 ~~12~~	~~49.06~~	~~45.72~~	~~19~~	~~1-281708-9~~	~~1-144270-9~~
12	46.52	43.18	18	1-281708-8 *	1-144270-8 7 *
7 ~~13~~	~~43.98~~	~~40.64~~	~~17~~	~~1-281708-7~~	~~1-144270-7~~
7 ~~14~~	~~41.44~~	~~38.10~~	~~16~~	~~1-281708-6~~	~~1-144270-6~~
15	38.90	35.56	15	1-281708-5 *	1-144270-5 7 *
7 ~~16~~	~~36.36~~	~~33.02~~	~~14~~	~~1-281708-4~~	~~1-144270-4~~
7 ~~17~~	~~33.82~~	~~30.48~~	~~13~~	~~1-281708-3~~	~~1-144270-3~~
18	31.28	27.94	12	1-281708-2 *	1-144270-2 7 *
7 ~~20~~	~~28.74~~	~~25.40~~	~~11~~	~~1-281708-1~~	~~1-144270-1~~
20	26.20	22.86	10	1-281708-0 *	1-144270-0 7 *
7 ~~25~~	~~23.66~~	~~20.32~~	~~9~~	~~0-281708-9~~	~~0-144270-9~~
25	21.12	17.78	8	0-281708-8 *	~~0-144270-8~~ 7 *
30	18.58	15.24	7	0-281708-7	~~0-144270-7~~ 7
35	16.04	12.70	6	0-281708-6 *	~~0-144270-6~~ 7 *
40	13.50	10.16	5	0-281708-5 *	~~0-144270-5~~ 7 *
50	10.96	7.62	4	0-281708-4 *	~~0-144270-4~~ 7 *
70	8.42	5.08	3	0-281708-3 *	~~0-144270-3~~ 7 *
100	5.88	2.54	2	0-281708-2	~~0-144270-2~~ 7

1 CES CONNECTEURS SONT PREVUS POUR ETRE ACCOUPLES AVEC LES EMBASES 'HE1402' SIMPLE RANGEE
(THESE CONNECTORS ARE DESIGNED TO BE MATED WITH 'HE1402' HEADERS SINGLE ROW)
-

2 LES REFERENCES SUIVIES D'UN ' * ' SONT LES VERSIONS NORMALISEES SELON LA 'CEI 603-8'
(THE PART-No FOLLOWED BY ' * ' ARE COVERED BY THE INTERNATIONAL STANDARD 'IEC603-8')

3 REVETEMENT DES CONTACTS: ETAME
(THE CONTACTS ARE TIN PLATED)

4 CONNECTEURS CONDITIONNES SOUS TUBE PVC
(THESE CONNECTORS ARE PACKAGED IN TUBE)

5 ' X ' EST REMPLACE PAR LE DEUXIEME CHIFFRE DES JAUGES AWG
(' X ' REPLACED BY THE SECOND DIGIT OF AWG AS DEFINED IN TABLE)

6 MATIERES - BOITIER: PBT UL94V0
- CONTACTS: BRONZE PHOSPHOREUX.
(MATERIALS - CASE: PBT UL94V0
- CONTACTS: PHOSPHOR BRONZE)

7 OBSOLETE.

THIS DRAWING IS A CONTROLLED DOCUMENT.

DIMENSIONS: mm

TOLERANCES UNLESS OTHERWISE SPECIFIED:
0 PLC ±-
1 PLC ±0.3
2 PLC ±
3 PLC ±
4 PLC ±
ANGLES ±5°

MATERIAL 6
FINISH 3

DWN 17NOV2000 C. COMBEDOUZON
CHK 17NOV2000 T. CORRIOU
APVD 17NOV2000 Y. PETRONIN
PRODUCT SPEC 108-15053
APPLICATION SPEC 114-15030
WEIGHT -

TE Connectivity

NAME HE 1402 PLUG, 90deg IDC SINGLE ROW

SIZE	CAGE CODE	DRAWING NO	RESTRICTED TO
A2	00779	C-281708	

CUSTOMER DRAWING | SCALE 4:1 | SHEET 1 OF 1 | REV D2

1471-9 (3/13)