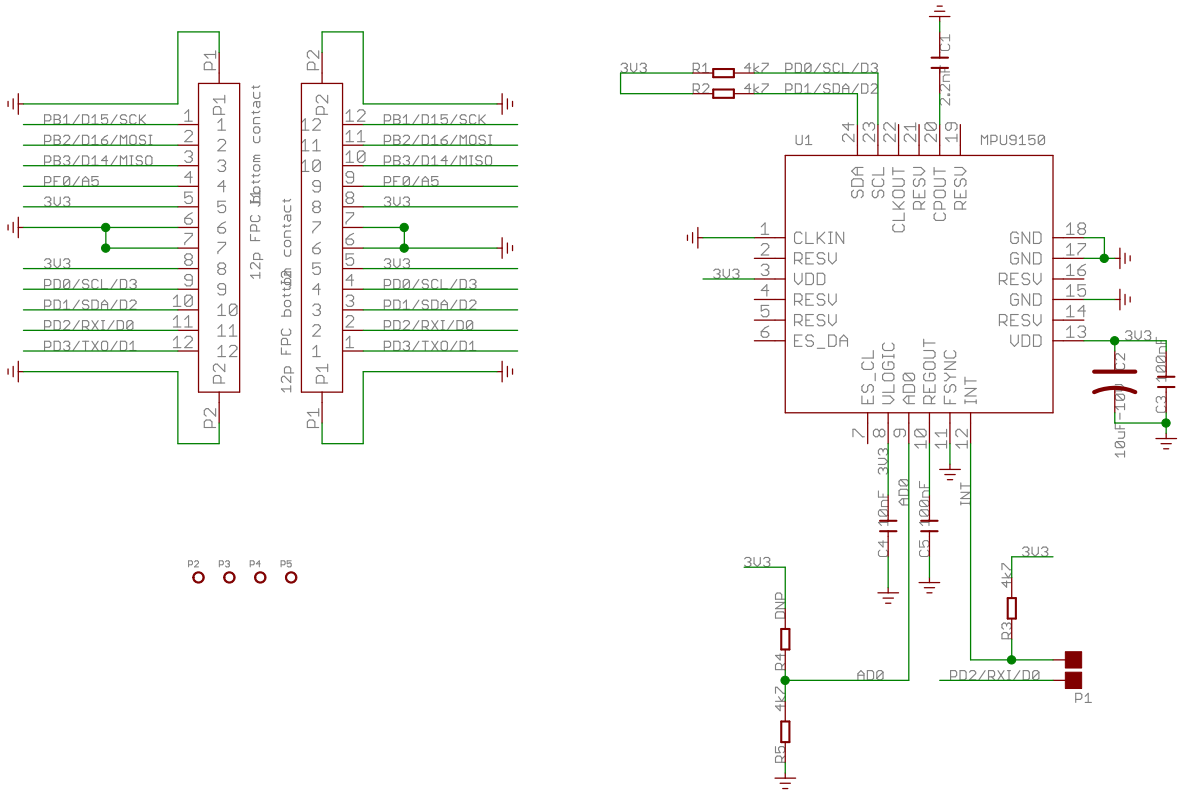

SeeedStudio

TITLE: Xadow-IMU 9DOF v1.0

Design: Genghui You	Check:	
Date: 2013/12/24 16:35:21	Vision: v1.0	Sheet: 1/1