Aug.1.2023 Copyright 2023 HIROSE ELECTRIC CO., LTD. All Rights Reserved.
In case of consideration for using Automotive equipment / device which demand high reliability, kindly contact our sales window correspondents.

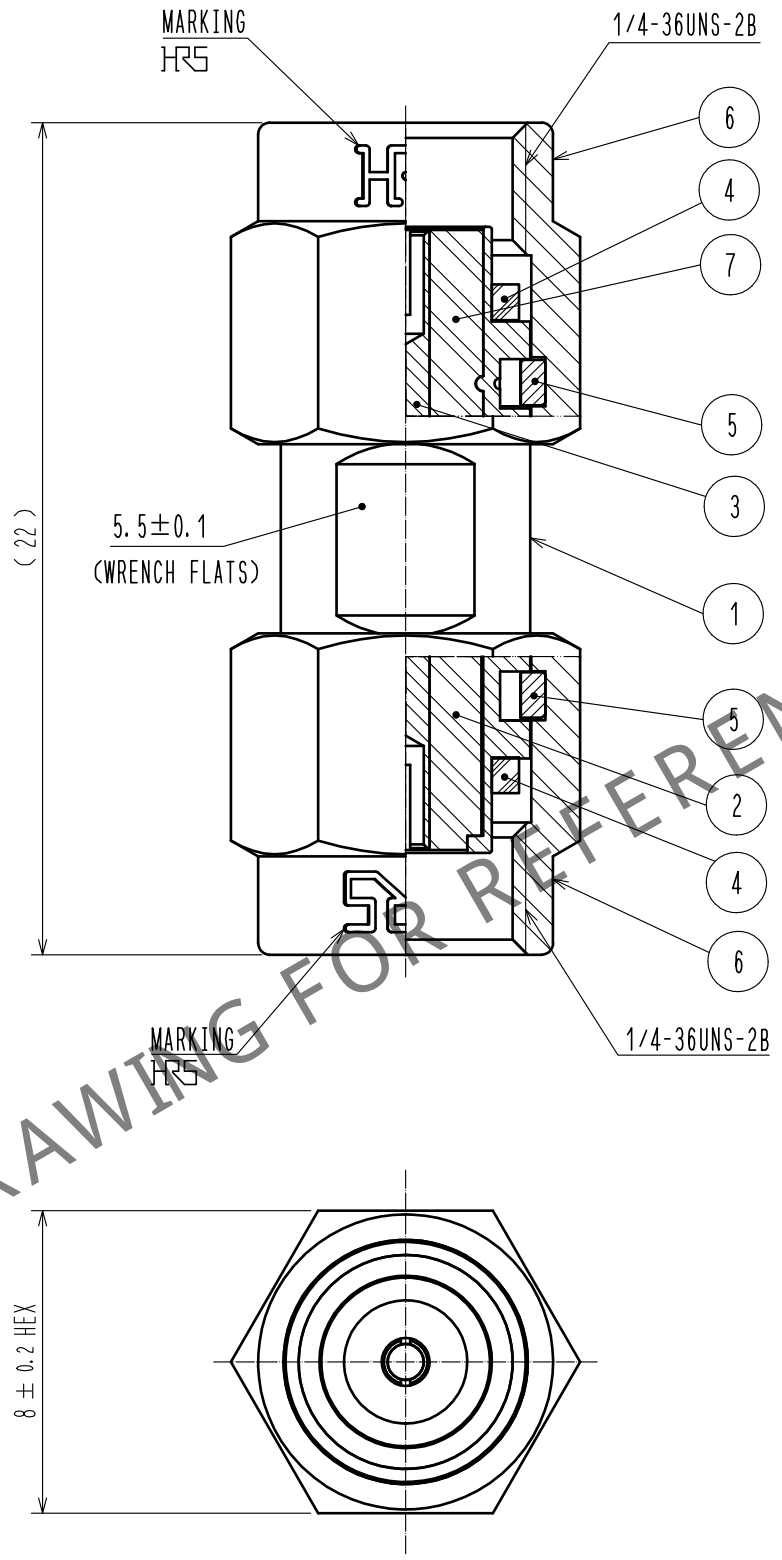

HRS DRAWING FOR REFERENCE

RoHS COMPLIANT

NO.	MATERIAL	FINISH . REMARKS	NO.	MATERIAL	FINISH . REMARKS
4	SILICON RUBBER				
3	BERYLLIUM COPPER	GOLD PLATING	7	PTFE	
2	PTFE		6	STAINLESS STEEL	PASSIVATE
1	STAINLESS STEEL	PASSIVATE	5	BERYLLIUM COPPER	NICKEL PLATING

UNITS mm	SCALE 5 : 1	COUNT	DESCRIPTION OF REVISIONS	DESIGNED	CHECKED	DATE
		0				

HIROSE ELECTRIC CO., LTD.

APPROVED	: TO. KATAYAMA	17. 08. 30	DRAWING NO.	EDC-379045-00-00
CHECKED	: KY. SHIMIZU	17. 08. 30	PART NO.	SMA(R)-A-PP
DESIGNED	: TY. OZAKI	17. 08. 30	CODE NO.	CL323-0127-0-00
DRAWN	: TY. OZAKI	17. 08. 30		0 1/1

FORM HC0011-5-51