THIS DRAWING IS UNPUBLISHED. RELEASED FOR PUBLICATION 20
© COPYRIGHT 20 BY - ALL RIGHTS RESERVED.

PART NUMBER	REV	TERMINATOR	FEED TYPE	DESCRIPTION
1530017-1	B	LEADMAKER	MECH POST FEED	CUTS CARRIER
1530017-2	B	BENCH	MECH PRE FEED	CUTS CARRIER
1530017-6	B	LEADMAKER	MECH POST FEED	CONTINUOUS CARRIER
7-1530017-1	B	LEADMAKER	MECH POST FEED	-1 AND SPARE PARTS
7-1530017-2	B	BENCH	MECH PRE FEED	-2 AND SPARE PARTS
7-1530017-6	B	LEADMAKER	MECH POST FEED	-6 AND SPARE PARTS
7-1530017-7	A	-	-	SPARE PARTS KIT

SET UP GAGE
458637-3

REVISIONS

P	LTR	DESCRIPTION	DATE	DWN	APVD
	B1	ECR-14-017742	02DEC2014	LG	TE

CRIMP DATA	DELPHI TERMINAL		DELPHI CRIMP SPECS
TERMINAL NAME: TAXI TERM M/P 280 SEALED			
CRIMP	SIZE	TYPE	RANGE
WIRE	3.00 [.118 IN]	F	14-18 AWG
INSUL	4.32 [.170 IN]	O	Ø2.50-3.00 [.098-.120 IN]
WIRE STRIP LENGTH 5.1-6.1 [.200-.240 IN]			APPL INSTRUCTIONS 408-8322 & 408-8490
TERMINAL APPL SPEC	NONE -		FEED 14.40 [.567 IN]

TERMINALS APPLIED

TE PN	MFG PN	TE SEAL PN	MFG SEAL PN
1572754-1	12129409	286514-1	12010293
-	-	-	-
-	-	-	-
-	-	-	-

WIRE SIZE	CRIMP HEIGHT *	REF SETTING *
14 AWG	1.65 ±0.05 [.065 ±.002 IN]	B5
16 AWG	1.60 ±0.05 [.063 ±.002 IN]	C1
18 AWG	1.50 ±0.05 [.059 ±.002 IN]	C5

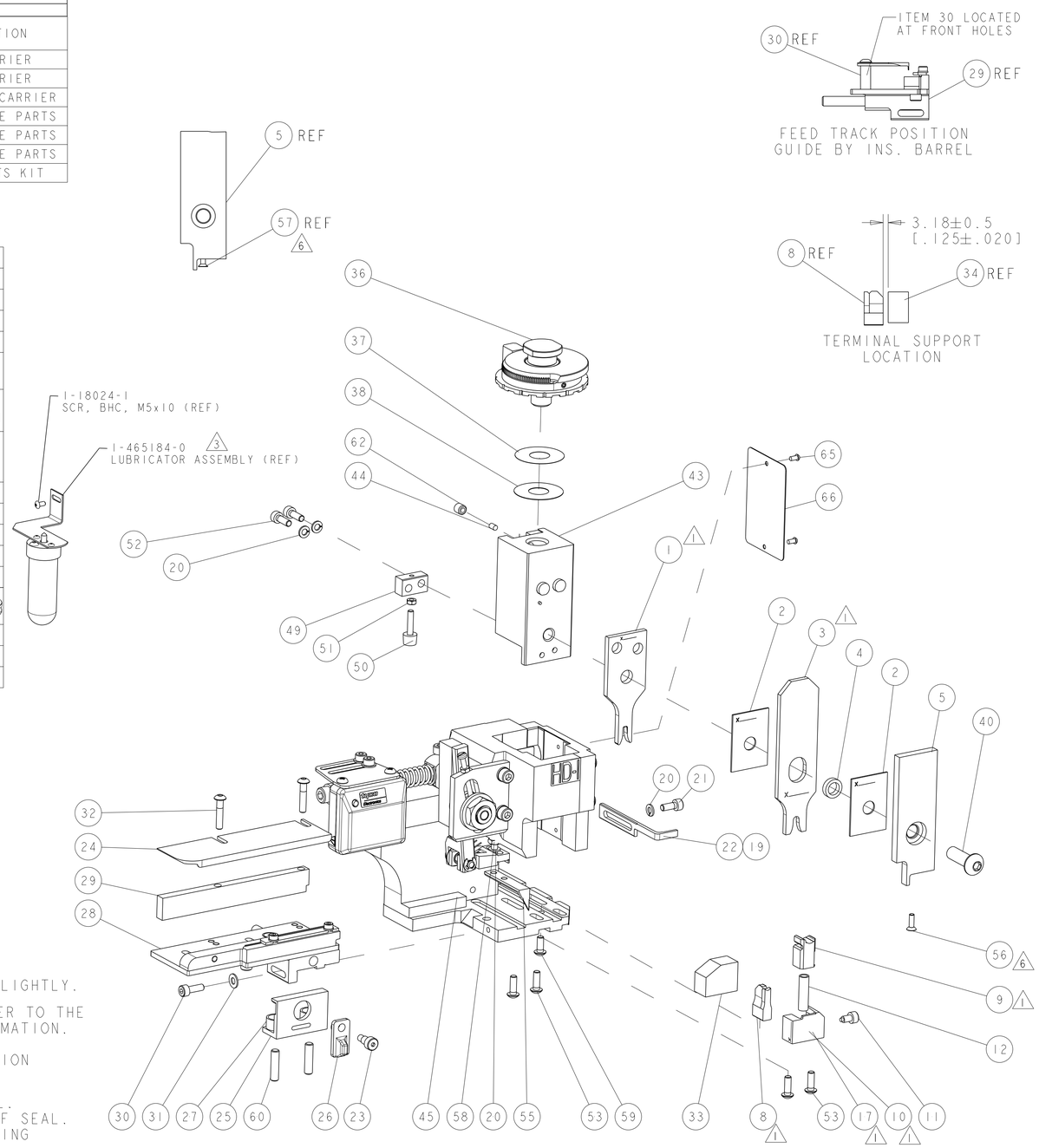

1. RECOMMENDED SPARE PARTS.
2. GREASE RAM, CAM, CAM FOLLOWER AND FEED ROD LIGHTLY.
3. CERTAIN TERMINALS REQUIRE LUBRICATION. REFER TO THE APPLICATOR INSTRUCTION SHEET FOR MORE INFORMATION.
4. LUBRICATE DAILY PER THE APPLICATOR INSTRUCTION SHEET SUPPLIED WITH THE APPLICATOR.
5. THIS APPLICATOR APPLIES TERMINAL WITH A SEAL. INSULATION DIA QUOTED IS OUTSIDE DIAMETER OF SEAL. WIRE INSULATION DIA IS DEPENDENT ON SEAL BEING APPLIED. SEAL PN - INS. DIA RANGE IS -.
6. APPLY TORQ-SEAL IN ALLEN SOCKET TO FILL HOLE AFTER FLAT HD HAS BEEN ADJUSTED TO CORRECT HEIGHT AT QUALIFICATION. APPLY #1-23419-5 LOC-TITE TO THREADS.

* WARNING
ON INSTALLATION, SET WIRE DISC TO LARGEST WIRE SIZE SETTING. USE OF SETTINGS BELOW MIN. REQUIRED CRIMP HEIGHT SETTING WILL CAUSE DAMAGE TO CRIMP TOOLING.

VIEW B ROTATED 180°

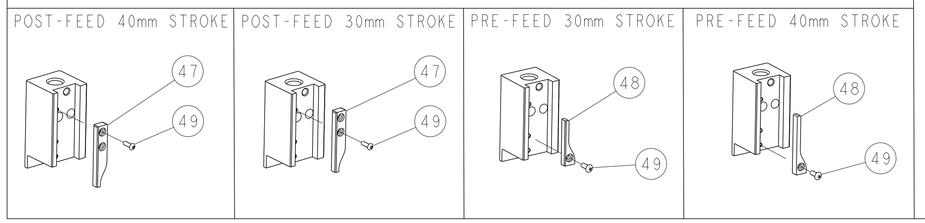

-77	-76	-72	-71	-6	-2	-1	PART NO	DESCRIPTION	ITEM NO
							-	-	70
-	1	1	1	1	1	1	1338705-3	DOCUMENTATION PACKAGE	69
-	-	-	-	-	-	-	-	-	68
-	-	-	-	-	-	-	-	-	67
-	1	1	1	1	1	1	461264-5	PLATE, IDENTIFICATION	66
-	2	2	2	2	2	2	21017-2	SCREW, DRIVE	65
-	-	-	-	-	-	-	-	-	64
-	-	-	-	-	-	-	-	-	63
-	1	1	1	1	1	1	3-18031-0	SCR, SET, CUP POINT M6 X 6.0	62
-	-	-	-	-	-	-	-	-	61
-	2	2	2	2	2	2	2-18032-5	SCR, SET, FLT POINT M5 X 20.0	60
-	1	1	1	1	1	1	18024-7	SCR, BTN SKT HD CAP (M4 X 10.0)	59
-	1	1	1	1	1	1	5-18022-2	SCR, HEX HD CAP M4 X 8.0	58
-	-	-	-	-	-	-	-	-	57
-	1	1	1	1	1	1	985575-3	SCR, FLT SKT HD CAP M3 X 10.0	56
-	1	1	1	1	1	1	1338685-1	PAWL, FEED	55
-	-	-	-	-	-	-	-	-	54
-	4	4	4	4	4	4	18024-8	SCR, BTN SKT HD CAP (M4 X 12.0)	53
-	2	2	2	2	2	2	1-18023-2	SCR, SKT HD CAP M4 X 12.0	52
-	1	1	1	1	1	1	18030-1	NUT, HEX, REG M3	51
-	1	1	1	1	1	1	811242-5	BUMPER, HOLD DOWN	50
-	1	1	1	1	1	1	690753-2	SPACER, TONKER	49
-	1	1	1	1	1	1	18024-3	SCR, BTN SKT HD CAP (M3 X 10.0)	48
-	-	1	-	-	1	-	1338675-1	CAM, UNIVERSAL PRE FEED	47
-	1	-	1	1	-	1	1338676-1	CAM, UNIVERSAL POST-FEED	46
-	1	1	1	1	1	1	1320999-3	APPLICATOR SUBASSEMBLY, HDI	45
-	1	1	1	1	1	1	690191-1	PLUG,NYLON	44
-	1	1	1	1	1	1	1338660-1	RAM	43
-	-	-	-	-	-	-	-	-	42
-	-	-	-	-	-	-	-	-	41
-	1	1	1	1	1	1	2-18024-6	SCR, BTN SKT HD CAP (M8 X 25.0)	40
-	-	-	-	-	-	-	-	-	39
-	1	1	1	1	1	1	690125-1	SHIM SUB-ASSY	38
-	1	1	1	1	1	1	469367-2	SHIM	37
-	1	1	1	1	1	1	879103-2	FINE ADJUST HEAD ASSEMBLY	36
-	-	-	-	-	-	-	-	-	35
-	-	-	-	-	-	-	-	-	34
-	1	1	1	1	1	1	1320934-3	SUPPORT, TERMINAL	33
-	2	2	2	2	2	2	1-18024-0	SCR, BTN SKT HD CAP (M4 X 20.0)	32
-	1	1	1	1	1	1	18027-2	WASHER, FLAT, REG M4	31
-	1	1	1	1	1	1	1-18023-2	SCR, SKT HD CAP M4 X 12.0	30
-	1	1	1	1	1	1	1-1320908-0	SPACER, STRIP GUIDE	29
-	1	1	1	1	1	1	1633073-1	STRIP GUIDE ASSEMBLY	28
-	2	2	2	2	2	2	1-22284-0	SPRING, COMPRESSION	27
-	1	1	1	1	1	1	356835-1	LEVER, DRAG RELEASE	26
-	1	1	1	1	1	1	240792-1	DRAG, TERMINAL	25
-	1	1	1	1	1	1	1320928-1	STRIP GUIDE	24
-	1	1	1	1	1	1	980371-4	SCR, SKT HD SHLDR 5.0 DIA X 6.0	23
-	1	-	1	1	-	1	690472-2	STRIPPER	22
-	1	1	1	1	1	1	1-18023-1	SCR, SKT HD CAP M4 X 10.0	21
-	4	4	4	4	4	4	18025-2	WASHER, SPRG LOCK, REG M4	20
-	-	1	-	-	1	-	690472-1	STRIPPER	19
-	-	-	-	-	-	-	-	-	18
-	1	-	-	1	-	-	1338684-2	SHEAR HOLDER, FRONT	17
-	-	-	-	-	-	-	-	-	16
-	-	-	-	-	-	-	-	-	15
-	-	-	-	-	-	-	-	-	14
-	-	-	-	-	-	-	-	-	13
-	1	1	1	1	1	1	3-22280-3	SPRING, COMPRESSION	12
-	1	1	1	1	1	1	356885-5	STOP, SHEAR	11
-	-	1	1	-	1	1	1-1320921-0	SHEAR HOLDER, FRONT, CUT	10
-	1	1	1	1	1	1	318707-1	FLOATING SHEAR, FRONT	9
1	2	2	2	1	1	1	1633703-8	ANVIL, COMBINATION	8
-	-	-	-	-	-	-	-	-	7
-	-	-	-	-	-	-	-	-	6
-	1	1	1	1	1	1	1338680-1	DEPRESSOR, SHEAR	5
-	1	1	1	1	1	1	238011-2	BLOCK, CRIMPER SPACER	4
1	2	2	2	1	1	1	9-904741-5	CRIMPER, INSUL O PREMIUM	3
-	2	2	2	2	2	2	455888-8	SPACER, CRIMPER	2
1	2	2	2	1	1	1	1633609-3	CRIMPER, WIRE	1

THIS DRAWING IS A CONTROLLED DOCUMENT.

DIMENSIONS: mm [IN]

TOLERANCES UNLESS OTHERWISE SPECIFIED:
0 PLC ±
1 PLC ±
2 PLC ±
3 PLC ±
4 PLC ±
ANGLES ±

MATERIAL - -
FINISH - -

DWN D.MORRIS 25SEPT2008
CHK G.BAILEY 25SEPT2008
APVD N.DEMING 25SEPT2008
PRODUCT SPEC -
APPLICATION SPEC See Table
WEIGHT -

TE Connectivity

NAME FINE ADJUST SIDE FEED HDI APPLICATOR -

SIZE	CAGE CODE	DRAWING NO	RESTRICTED TO
A1	-	C-1530017	-

Customer Drawing SCALE 3:5 SHEET 1 OF 1 REV B1

4B05 (3/13)
Pro/ENGINEER DRAWING