Pulse Electronics
www.pulseelectronics.com

NOTES: UNLESS OTHERWISE SPECIFIED

1.

NOTICE:	THIS IS A RoHS COMPLIANT COMPONENT/PRODUCT. ALL ENGINEERING CHANGES MUST HAVE PRIOR APPROVAL BY THE DESIGN CENTER.
RoHS ✓	

2. PLASTIC: THERMOSET PLASTIC MATERIAL WITH FLAMMABILITY RATING UL 94V-0 OR BETTER.
3. SOLDERABILITY: CONFORMS TO ANSI/J-STD-002, 245°C REFLOW PEAK TEMPERATURE PER IPC/EIA J-STD-003A
4. OPERATING TEMPERATURE: 0°C TO +70°C
5. STORAGE TEMPERATURE: -20°C TO +125°C
6. JEDEC MOISTURE: LEVEL 1.
7. DIMENSIONS ARE IN INCHES WITH THE FOLLOWING TOLERANCES:
   .XX = ±.01 .XXX= ±.005

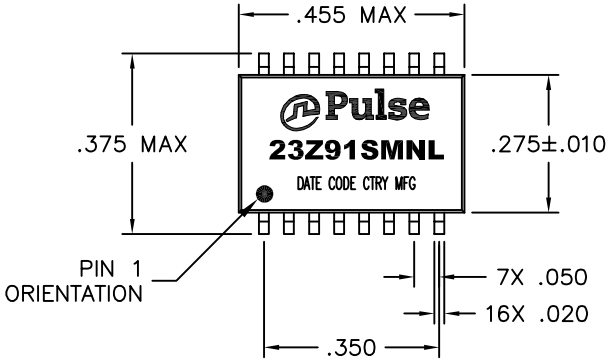

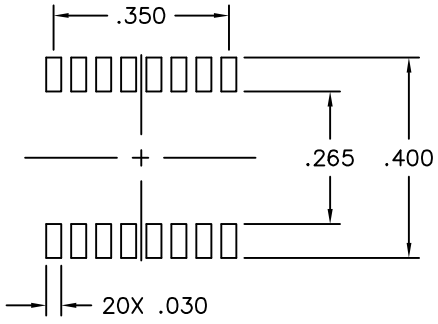

SUGGESTED LAND PATTERN

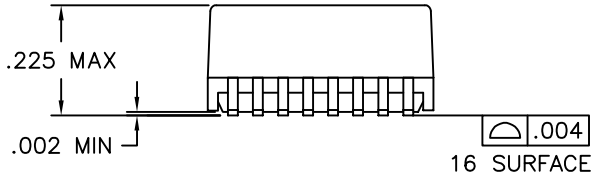

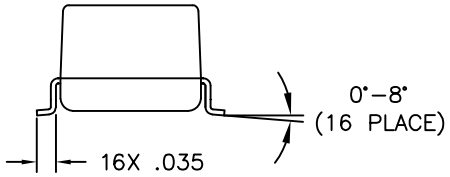

ELECTRICAL CHARACTERISTICS AT +25°C UNLESS OTHERWISE SPECIFIED
(FOR REFERENCE ONLY. USED FOR CUSTOMER INFORMATION.)

PARAMETER	SPECIFICATIONS
OPERATING TEMP	0°C – 70 °C
POLARITY	PER SCHEMATIC
TURNS RATIO	1 : 1± 2%
CAPACITANCE WINDING TO WINDING	10 pF MAX (AT 100 KHz 20 mVRMS)
DC RESISTANCE	0.3 OHMS MAX
LEAKAGE INDUCTANCE	0.2 uH MAX
PRIMARY INDUCTANCE	100uH ±20% (AT 100 KHz 20 mVRMS)
INPUT – OUTPUT ISOLATION	1500 VRMS MIN @ 60 SECONDS

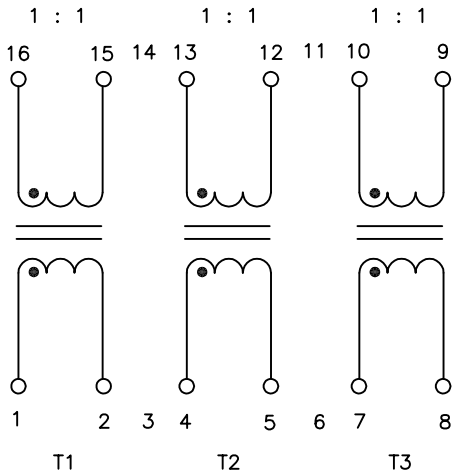

SCHEMATIC

© Copyright, 2012. Pulse Electronics Corp. All rights reserved. Drawing specifications subject to change without notice. (01/13/12)

PULSE CONFIDENTIAL & PROPRIETARY	PRODUCT DESCRIPTION	PS DRAWING	SHEET:	DWG. NO./ PART NO.	REV.
	MDL,SIN,10D,1:1,SM,TU	PS-2400.001-A	1	23Z91SMNL	M12