| BUD | PART NAME | NEMA DIE CAST BOX WITH EMI/RFI SHIELDING | PART No. | ANS-3827 ANS-3827-B | REVISION DATE | 8-22-13 |
|---|---|---|---|---|---|---|

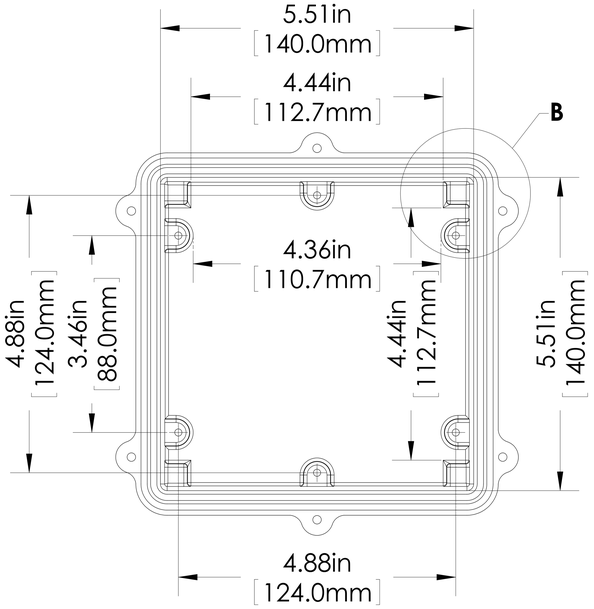


INSIDE BODY DETAILS

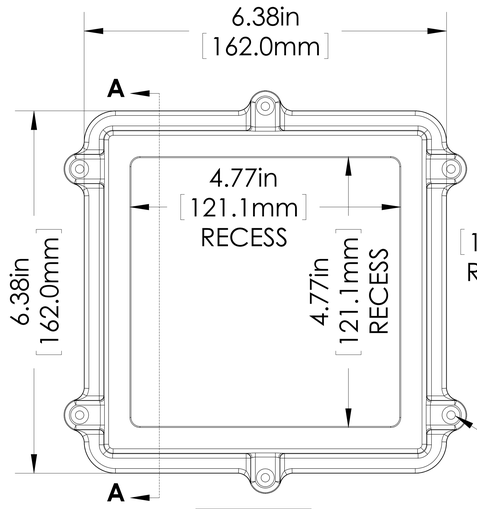


TOP VIEW

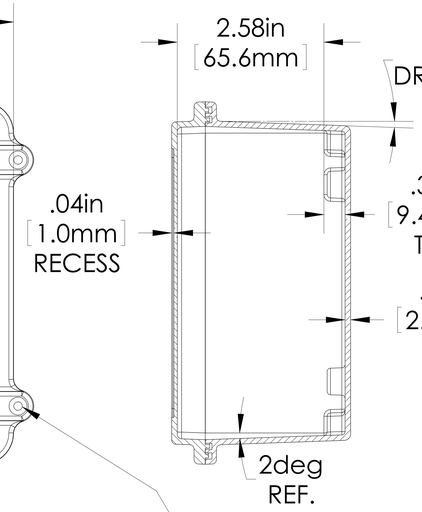


**SECTION A-A**

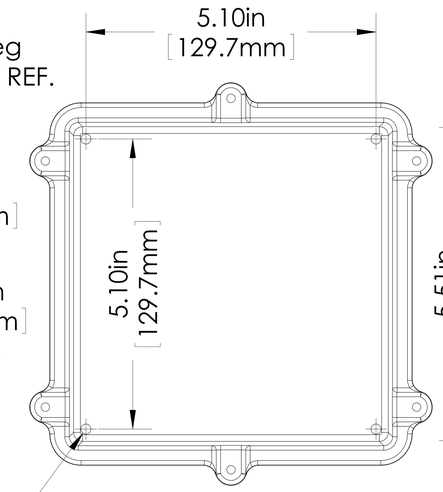


BOTTOM VIEW

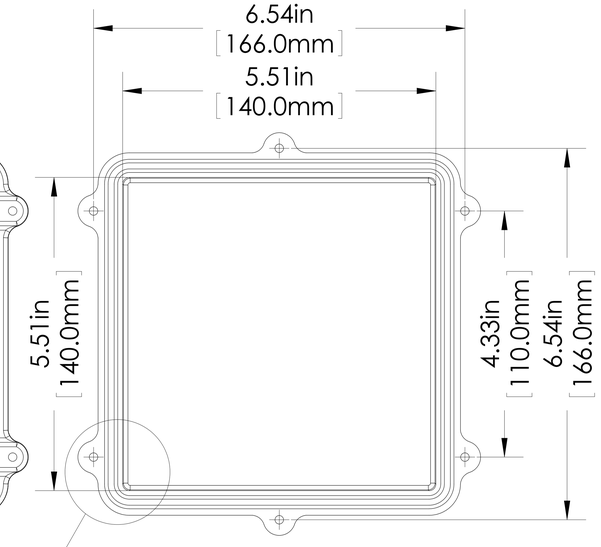


INSIDE COVER DETAILS

SIX (6) M4x0.7 PITCH
x 20mm (.787in.) LG.
STAINLESS STEEL FLAT HEAD
CAPTIVE SCREWS

∅.177in
[4.50mm]
x .315in[8.00mm] DEEP (4X)
[ACCEPTS M5 x 10mm (.394in.) LG.
SELF-TAPPING SCREWS.
(NOT SUPPLIED)

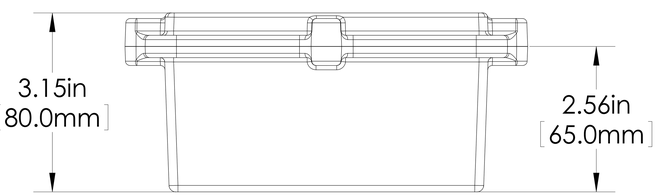


MEETS NEMA 1, 2, 4, 4X, 12, 13 AND IP67 RATINGS.

MATERIAL: ALUMINUM ALLOY ADC-12

FINISH: NATURAL (NO SUFFIX PART NO.)
SMOOTH BLACK (-B SUFFIX PART NO.)

TOLERANCES: ALL HOLE DIAMETERS: ±.005in[±.13mm]
ALL OTHER DIMENSIONS: ±.02in[±.4mm]

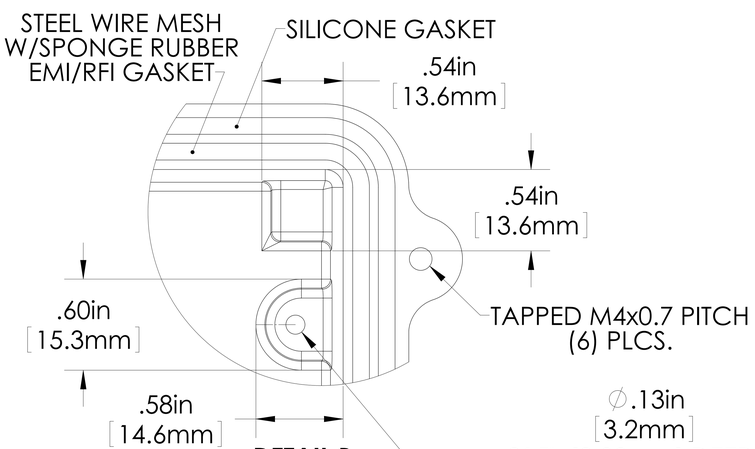


**DETAIL B**
**SCALE 4 : 1**

∅.13in
[3.2mm]
x .315in[8.00mm] DEEP (6X)
[ACCEPTS M3.5 x 6mm (.236in.) LG.
SELF-TAPPING SCREWS
(NOT SUPPLIED)]

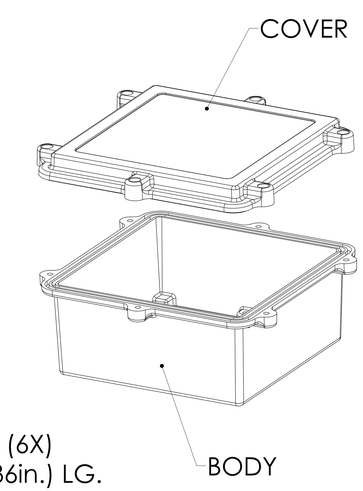


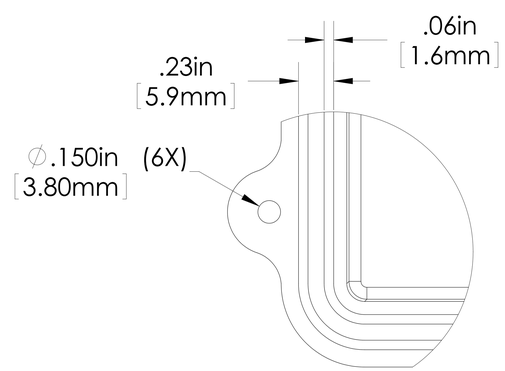


**DETAIL C**
**SCALE 4 : 1**

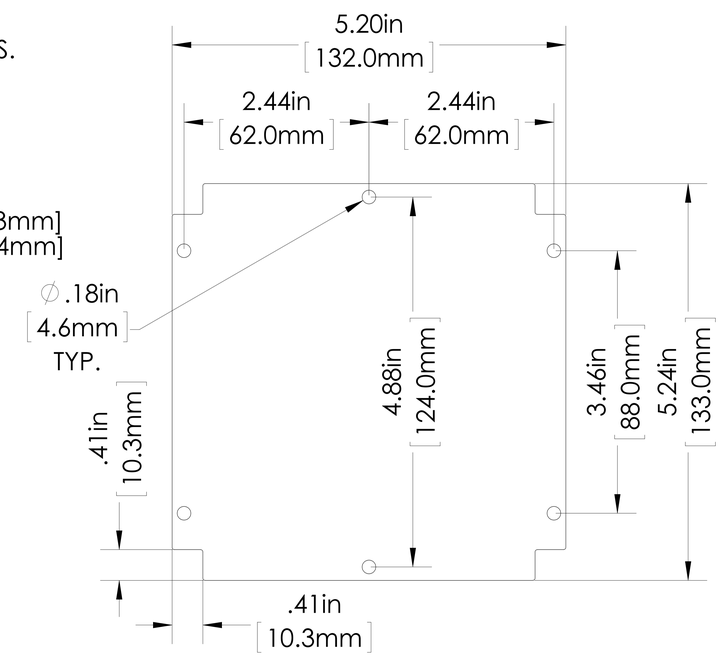


SUGGESTED PC BOARD OR
INTERNAL PANEL LAYOUT