THIS DRAWING IS UNPUBLISHED. RELEASED FOR PUBLICATION -,- .
© COPYRIGHT - BY TYCO ELECTRONICS CORPORATION. ALL INTERNATIONAL RIGHTS RESERVED.

| LOC | DIST |
|---|---|
| AF | 50 |

REVISIONS

| P | LTR | DESCRIPTION | DATE | DWN | APVD |
|---|---|---|---|---|---|
| | C1 | REVISED PER ECR-10-013120 | 24JUN10 | HMR | GJ |

1 SPECIFICATIONS:
MAGNET WIRE #18- #34 AWG. 1.02[.040]-0.16[.006] DIA COPPER, OTHER SIZES MAY BE ACCOMMODATED, CONSULT TYCO ELECTRONICS FOR APPROVAL.

2 POCKET RECOMMENDATION: # 1601427

3 TERMINAL APPLICATION TO COMPLY WITH TYCO ELECTRONICS SPECIFICATION 114-13166 FIGURE 15.

4 TWO(2) TERMINALS SHOWN FOR ILLUSTRATION PURPOSES ONLY.

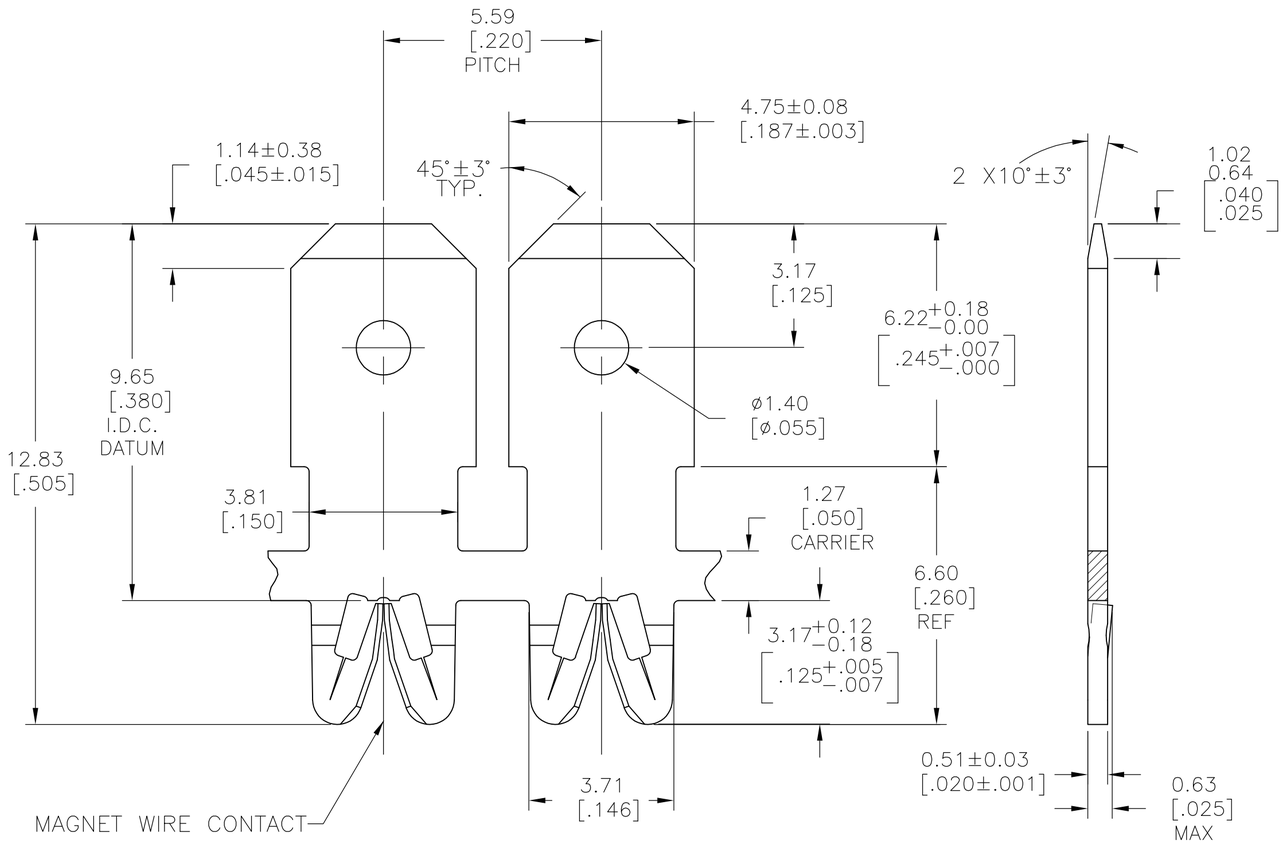


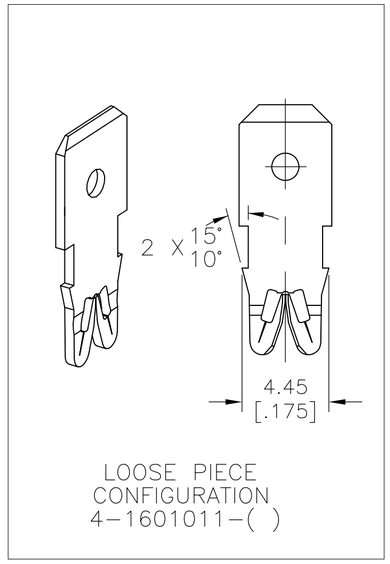


1601011

1601011-( )

TERMINALS TO UNWIND FROM REELS AS SHOWN:

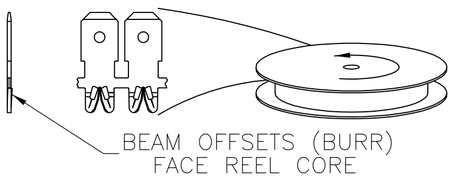


| | | |
|---|---|---|
| - | - | - |
| - | - | - |
| - | - | - |
| UNPLATED | 031-023-000 | 4-1601011-1 |
| POST PLATED TIN OVER NICKEL | - | 1601011-2 |
| UNPLATED | 131-023-000 | 1601011-1 |
| FINISH | REFERENCE PART NUMBER | TE PART NUMBER |

THIS DRAWING IS A CONTROLLED DOCUMENT.

DIMENSIONS: mm [INCHES]

TOLERANCES UNLESS OTHERWISE SPECIFIED:

| | | |
|---|---|---|
| 0 PLC | ± | - |
| 1 PLC | ± | - |
| 2 PLC | ± | 0.13[.005] |
| 3 PLC | ± | - |
| 4 PLC | ± | - |
| ANGLES | ± | 2° |

MATERIAL: BRASS, SPRING HARD

FINISH: SEE TABLE

| | | |
|---|---|---|
| DWN | J.WELLER | 11JAN2002 |
| CHK | M.FEHER | 11JAN2002 |
| APVD | K.RANDOLPH | 11JAN2002 |
| PRODUCT SPEC | 108-2085 | |
| APPLICATION SPEC | 3 | |
| WEIGHT | - | |

CUSTOMER DRAWING

Tyco Electronics — Tyco Electronics Corporation, Harrisburg, PA 17105-3608

NAME: STANDARD RANGE WIRE TO 4.75 X 0.51 BARB TAB SIAMEZE TERMINAL

| SIZE | CAGE CODE | DRAWING NO | RESTRICTED TO |
|---|---|---|---|
| A2 | 00779 | C-1601011 | - |

| SCALE | SHEET | REV |
|---|---|---|
| 9:1 | 1 OF 1 | C1 |