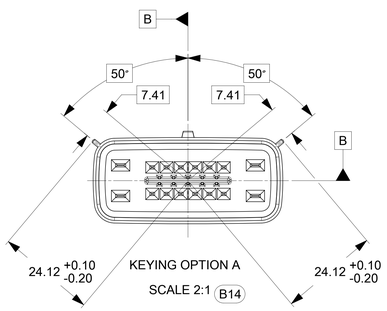

KEYING OPTION A
SCALE 2:1 (B14)

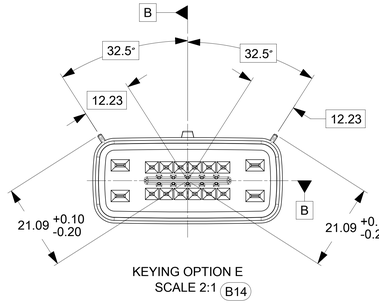

KEYING OPTION E
SCALE 2:1 (B14)

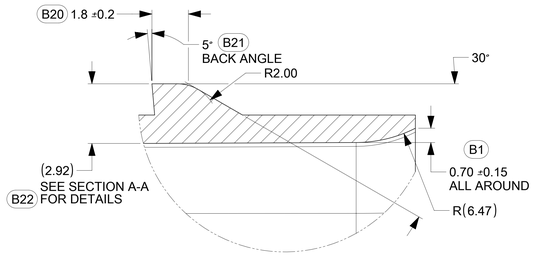

DETAIL F
SCALE 10:1

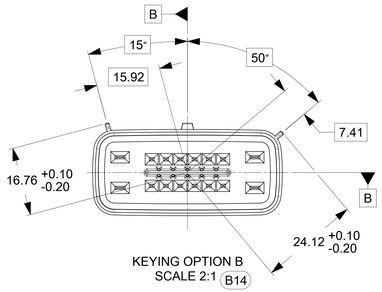

KEYING OPTION B
SCALE 2:1 (B14)

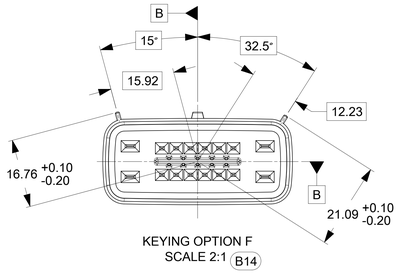

KEYING OPTION F
SCALE 2:1 (B14)

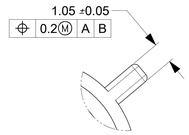

DETAIL C
SCALE 10:1
APPLIES 2X
SEE KEYING OPTION VIEWS
FOR POSITIONS

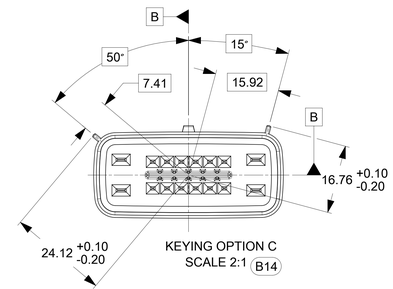

KEYING OPTION C
SCALE 2:1 (B14)

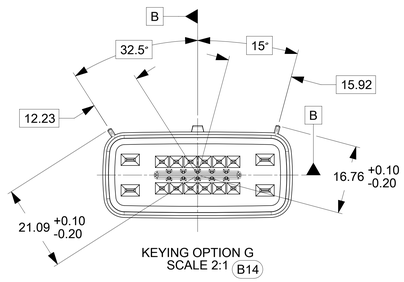

KEYING OPTION G
SCALE 2:1 (B14)

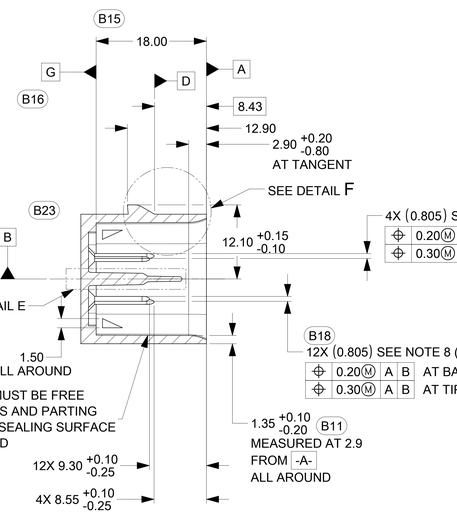

SECTION A-A

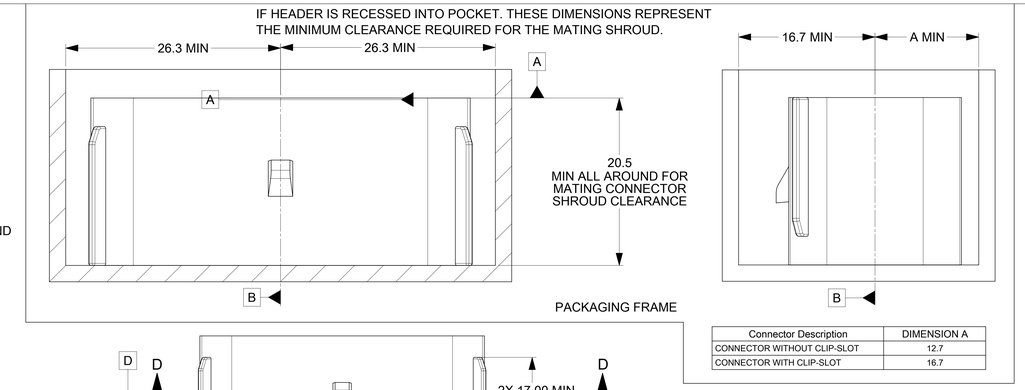

Connector Description	DIMENSION A
CONNECTOR WITHOUT CLIP-SLOT	12.7
CONNECTOR WITH CLIP-SLOT	16.7

SCALE 1:1

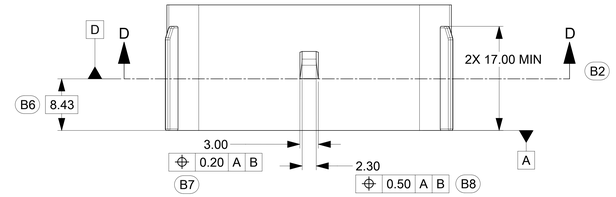

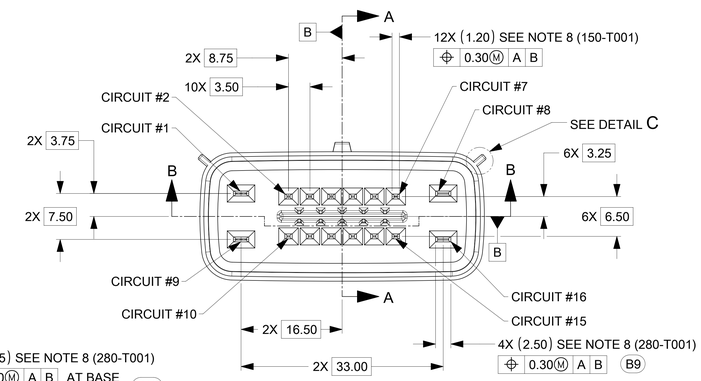

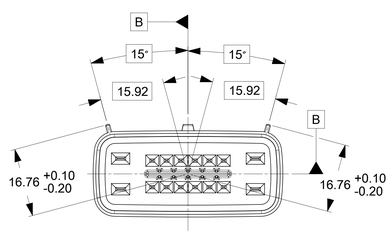

KEYING OPTION D
SCALE 2:1 (B14)

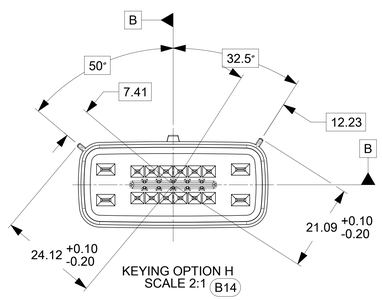

KEYING OPTION H
SCALE 2:1 (B14)

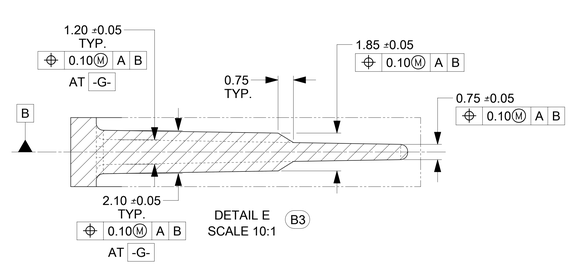

DETAIL E
SCALE 10:1 (B3)

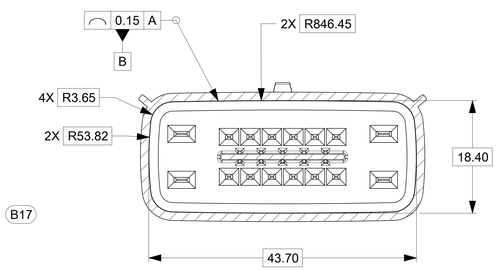

SECTION D-D
AT DATUM -D- (B5)
SCALE 3:1

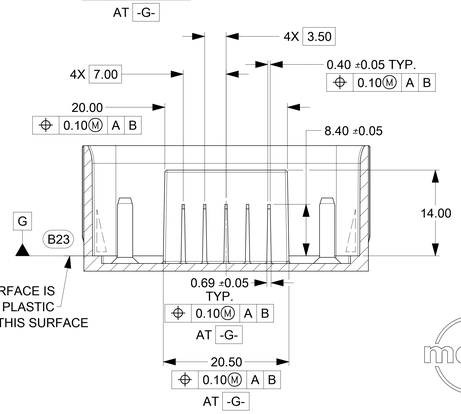

SECTION B-B (B4)
SCALE 3:1

CONSTRUCTION BELOW THIS SURFACE IS
NOT CONTROLED BY EWCAP. NO PLASTIC
FEATURES MAY EXTEND ABOVE THIS SURFACE

999-S-016-2-H01	H	YELLOW
999-S-016-2-G01	G	YELLOW
999-S-016-2-F01	F	YELLOW
999-S-016-2-E01	E	YELLOW
999-S-016-2-D01	D	BLACK
999-S-016-2-C01	C	DARK GREY
999-S-016-2-B01	B	GREY
999-S-016-2-A01	A	BLACK
EWCAP PIN	OPTION	MATING CONNECTOR COLOR

(B17)

NOTES: UNLESS OTHERWISE SPECIFIED

1. DRAFT ANGLE PERMISSIBLE 0.25° MAXIMUM.
2. ALL DIMENSIONS SHOWN IN MILLIMETERS.
3. DIMENSIONING AND TOLERANCING PER ASME Y14.5M-1994
4. RADII ON ALL CORNERS SHOWN SHARP OR ALL UNSPECIFED RADII: 0.25 EXCEPT AS NOTED.
5. STANDARD COLORS FOR POLARIZATION (SEE CHART). DEVATION REQUIRES APPROVAL OF AUTHORIZED PERSON.
6. A FULL SHROUD ON THE MATING CONNECTOR IS REQUIRED TO INSURE THAT THE CONNECTOR-HEADER POLARIZATION FEATURES (OPTIONS A THRU H) WILL FUNCTION. THE SHROUD ALSO PREVENTS SCOOP DAMAGE TO THE HEADER PINS. REFER TO "SAE/USCAR-12 CONNECTOR DESIGN GUIDE LINES" FOR ADDITIONAL INFORMATION.
7. REFER TO USCAR/EWCAP PART LIST AS FOUND ON WEBSITE http://www.uscarteams.org

(B13) 8. FOR BLADE TERMINAL DESIGN INFORMATION SEE EWCAP DWG. # EWCAP-001

(B12) 9. THIS IS A 100% CAD GENERATED PART. THE CAD MATHEMATICAL DATA IS THE MASTER FOR THIS PART. FOR DIMENSIONAL OR ANY INFORMATION NOT SHOWN ON THIS DRAWING, ANALYZE THE CAD MODEL.

162	C	CHARTED DIMENSION ADDED FOR WITH AND WITHOUT CLIPSLOT	8-3-20	GE	MV
088	B23	ADDED DRAFT DIRECTION SYMBOL	3-25-11		
088	B22	ADDED REF DIMENSION FOR	3-11-11		
		LATCH HEIGHT			
088	B21	REMOVED THE WORD "OPTION"	3-11-11		
		AT VIEW OF BACK ANGLE			
088	B20	CHANGED FROM 1.79 TO 1.80	3-11-11		
088	B19	ADDED 4X (0.805) 0.20Ⓜ A B AT BASE	1-14-11		
		AND 0.30Ⓜ A B AT TIP FOR 2.8			
		BLADE TERMINALS			
088	B18	CHANGED 16X TO 12X FOR THE 1.5	1-14-11		
		BLADE TERMINALS			
088	B17	UPDATED CONNECTOR COLORS	1-14-11		
088	B16	ADDED -G-	5-04-10		
088	B15	REMOVED // 0.10Ⓜ A B	5-04-10		
088	B14	REMOVED SHORTING BAR NOTE	5-04-10		
088	B13	UPDATED NOTE 8 REMOVED REV F	5-04-10		
088	B12	ADDED NOTE 9	5-04-10		
088	B11	ADDED DIM 1.35+0.10/-0.20 MEASURED	5-04-10		
		AT 2.9 FROM -A- ALL AROUND			
088	B10	ADDED SEE NOTE 8	5-04-10		
088	B9	2.50 WAS 2.80, ADDED (280-T001)	5-04-10		
088	B8	ADDED 0.50 A B	5-04-10		
088	B7	ADDED 0.20 A B	5-04-10		
088	B6	ADDED DIM 8.43	5-04-10		
088	B5	ADDED SEC C-C	5-04-10		
088	B4	UPDATED SEC B-B	5-04-10		
088	B3	ADDED DETAIL D	5-04-10		
088	B2	ADDED SEC C-C	5-04-10		
088	B1	ADDED DIM 0.70±0.15 ALL AROUND	5-04-10		
088	B	RELEASED	5-04-10	KC	MV
CHANGE SERIAL NUMBER	LET	REVISION RECORD	DATE	DWN	CHK

TOLERANCES (UNLESS OTHERWISE SPECIFIED)
DIMENSIONS ARE IN MILLIMETERS
ANGLES ±3°
X ±0.2 XX ±0.10

THIRD ANGLE PROJECTION

EWCAP

SCALE	DRAWN BY	CHECKED BY	DATE
4 - 1	G.ELLIOTT	M.VANSLAMBROUCK	08-03-20

TITLE
DIRECT CONNECT INTERFACE
16 WAY (2 X 8) 1.5MM SEALED MALE

SHEET	DRAWING NUMBER	SIZE	DO NOT SCALE DRAWING COMPUTER AIDED DRAWING	REVISION LEVEL
OF	999-S-016-2-Z02	E		C