LOADING PATTERN MATING SIDE

f	6	6	6	6	6	6	6	6	6					6	6	6	6	6	6	6	6
e	4	4	4	4	4	4	4	4	4	4	4	4	4	4	4	4	4	4	4	4	4
d	4	4	4	4	4	4	4	4	4	4	4	4	4	4	4	4	4	4	4	4	4
c	5	4	4	5	5	5	4	4	4	4	4	4	4	4	4	4	5	5	5	4	4	5
b	4	4	4	4	4	4	4	4	4	4	4	4	4	4	4	4	4	4	4	4	4	4
a	4	4	4	4	4	4	4	4	4	4	4	4	4	4	4	4	4	4	4	4	4	4
z	6	6	6	6	6	6	6	6	6					6	6	6	6	6	6	6	6	6
POS	01				05					10					15					20		

LOADED CONNECTOR ASSEMBLY
(FOR EXAMPLE)

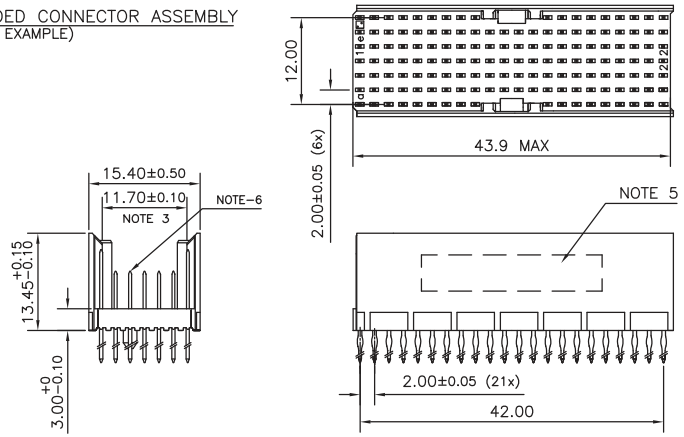

CONTACT OVERVIEW

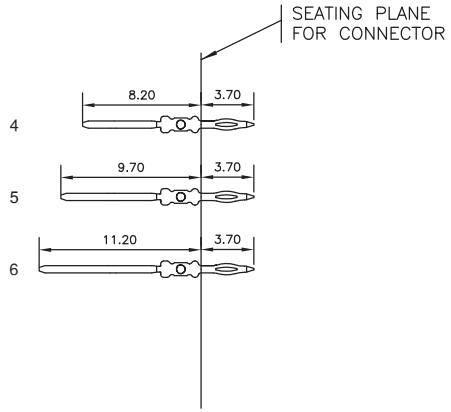

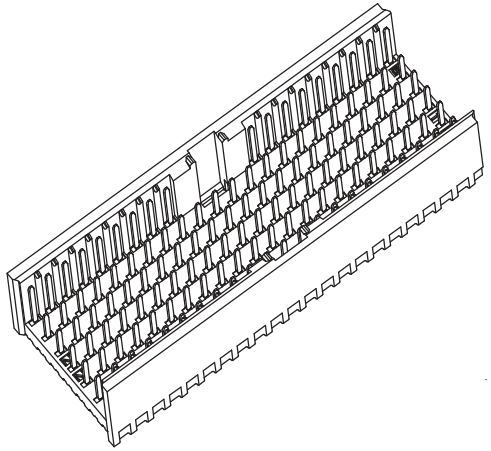

LAY-OUT P.C.B.-HOLE

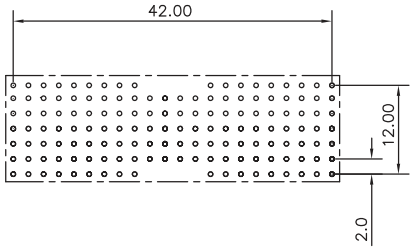

HM2P68PDT2P1- - -

LEAD FREE INDICATOR : LF = LEAD FREE
(DIGIT 15 & 16)

PLATING CODE (DIGIT 13 AND 14)
(REF DRW NO. BS,C , 201844 , 003)

NOTES

1. THIS PRODUCT IS CSA APPROVED.
2. THIS PRODUCT IS UL RECOGNIZED.
3. MEASURED AT THE BOTTOM.
4. MATERIAL CONTACT: PHOSPHORBRONZE
   HOUSING: CREAM WHITE GLASS FILLED POLYESTER UL-94V0
5. CONNECTOR PRINTED WITH P/N AND DATE CODE.
6. FOR ACTUAL CONTACT LOADINGS, SEE LOADING PATTERN MATING SIDE.
7. SHAPE OF CONNECTOR HOUSING CAN ALTER DEPENDING ON PRODUCTION LOCATION
8. THE PRODUCT (LF) MEETS EUROPEAN UNION DIRECTIVES AND OTHER COUNTRY REGULATIONS AS DESCRIBED IN GS-22-008
9. FOR RECOMMENDED PTH DIMENSIONS REFER DRAWING : BS, A , 201572 , 001

CATALOG NO: HM2P68PDT2P1- - - -

ltr	ecn no	dr	date
A	I06-0017	MINI	2006-02-20
B	I06-0141	MINI	2006-08-08

dr	MINI K VANDANATH	2006-02-20
engr	BIJU K PAUL	2006-02-20
chr	BIJU K PAUL	2006-08-08
appd	BIJU K PAUL	2006-08-08

mat'l. code: SEE NOTE 4
surface: ISO 1302
tolerance: ISO 406 ISO 1101
tolerances unless otherwise specified: angles 0°±1°; linear .0±0.2, .00±0.1
projection: MM
scale: –

product family: MILLIPACS
title: MPACS 5+2R STR HDR CONN TYPE AB 22 POS. (THICK RIB VERSION)
dwg no: BS, C ,203028, 678
sheet 1 of 1
size: A3
type: Product Customer Drawing

sheet index | revision sheet | B 1

form: A3

Copyright FCI
FCIconnect.com

PDM: Rev:B STATUS:Released Printed: Dec 04, 2007