DRAWING MADE IN THIRD ANGLE PROJECTION

680221 ⇔ 680221

<US161B>DEPTPROJB>U.1618>U.FTB

PART NUMBER	REV	FIRST USED
680221 -1	A	122500-1
680221 -2	A	565435-5
680221 -3	A	354500-1

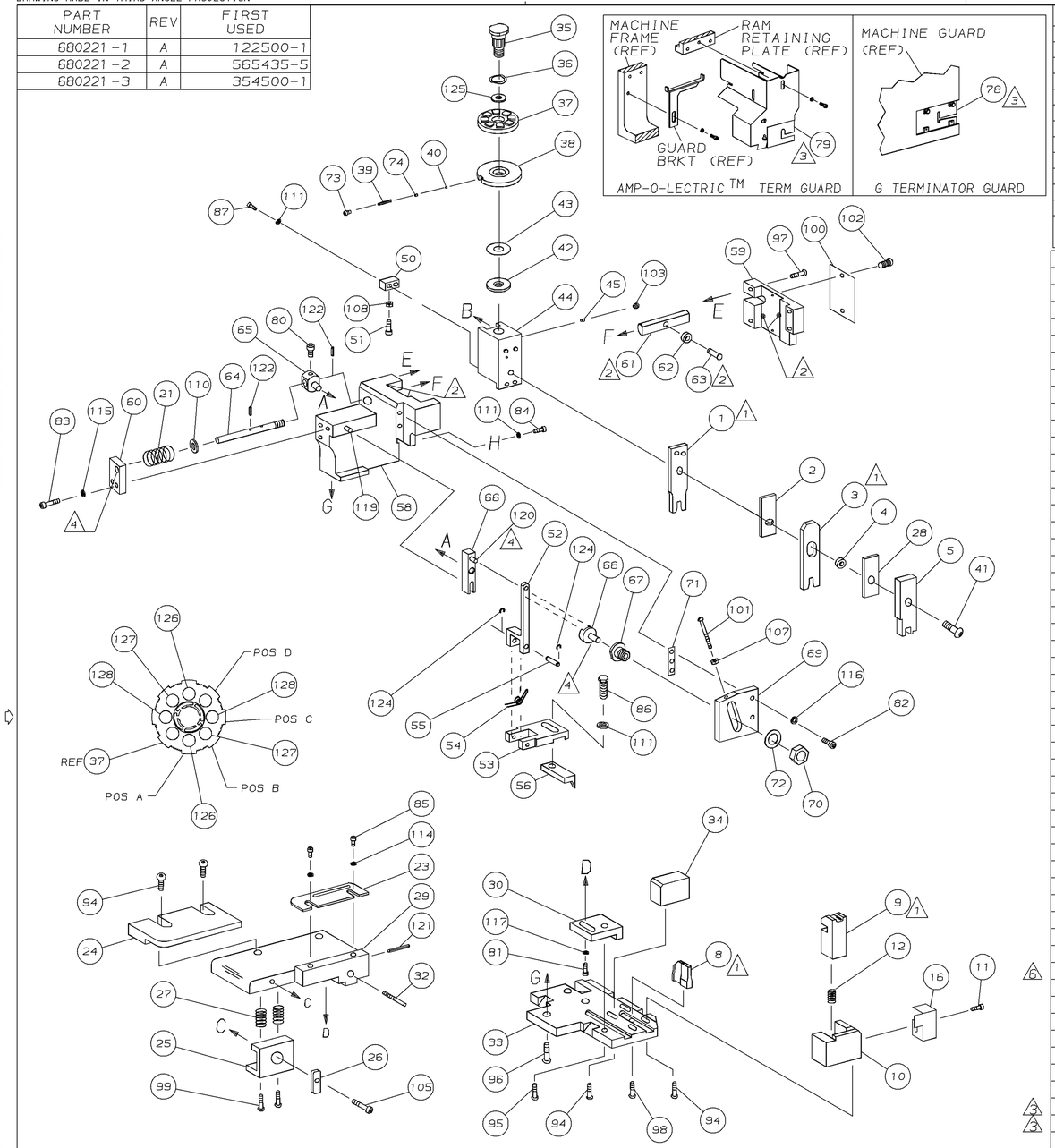

TERMINAL NAME: .187 SERIES PIGGYBACK FASTON™ RECEPTACLE

63873

CRIMPING DATA

PAD LTR	CRIMP HEIGHT	WIRE SIZE
A	.056 ±.002 [1.42 ±0.05mm]	18
B	.050 ±.002 [1.27 ±0.05mm]	20
C	.047 ±.005 [1.19 ±0.05mm]	22
D	NOT	USED

CRIMP	SIZE	TYPE	RANGE
WIRE	.070 [1.778mm]	F	22 - 18
INSUL	.140 [3.556mm]	O	.090 - .133

WIRE STRIP LENGTH	TERM APPL SPEC	FEED	APPL INSTRUCTION	SET UP GAGE	LAYOUT
–	–	.535	408-8040	458637-1	SIM S35

							129	
2	2	2	–	C	4-354779-1	PIN, WIRE DISC (.3195) C	128	
2	2	2	–	C	3-354779-5	PIN, WIRE DISC (.3165) B	127	
2	2	2	–	C	2-354779-2	PIN, WIRE DISC (.3100) A	126	
1	1	1	–	A	986950-1	WASHER, FLAT PRECISION	125	
REF	REF	REF	–	A	21045-3	RING, RET "C" (ø.187) FD FING PIN	124	
							123	
REF	REF	REF	–	A	5-21028-1	PIN, SLT SPR (ø.125x.50) ADJ ROD	122	
1	1	1	–	A	4-21028-0	PIN, SLT SPR (ø.093x.75) ST GDE PL	121	
REF	REF	REF	–	A	1-21030-1	PIN, DOWEL (ø.187x.50) LEVER	120	
REF	REF	REF	–	A	1-21030-6	PIN, DOWEL (ø.187x1.25) HOUSING	119	
							118	
1	1	1	–	A	21024-5	WASHER, LOCK (#10) ADJ BLOCK	117	
REF	REF	REF	–	A	21024-5	WASHER, LOCK (#10) ADJ PLATE	116	
REF	REF	REF	–	A	21024-5	WASHER, LOCK (#10) FEED GDE ROD	115	
2	2	2	–	A	21024-2	WASHER, LOCK (#4) FRONT STP GUIDE	114	
							113	
							112	
4	4	4	–	A	21024-4	WASHER, LOCK (#8) STRIPPER	111	
REF	REF	REF	–	A	21899-4	WASHER, FLAT (ø5/16) SCREW ADJ	110	
							109	
1	1	1	–	A	21018-5	NUT, HEX (NO. 6) HOLDDOWN	108	
REF	REF	REF	–	A	21018-5	NUT, HEX (6-32) FEED ADJ	107	
							106	
1	1	1	–	A	22353-8	SCR, SHLD (ø.187x.25) DRAG LEVER	105	
1	1	–	–	A	992031-1	PIN, CLEVIS	104	
1	1	1	–	A	21009-2	SCR, SKT SET (1/4-20x.25 LW) RAM	103	
2	2	2	–	A	21017-2	SCR, DRIVE (#2x.19) ID PLATE	102	
REF	REF	REF	–	A	6-23715-5	SCR, PAN HD (6-32x1.50) FEED ADJ	101	
1	1	1	–	B	461264-1	PLATE, IDENTIFICATION	100	
2	2	2	–	A	3-21002-0	SCR, BHC (10-32x.88) DRAG	99	
1	1	1	–	A	22733-8	SCR, BHC (8-32x.38 LW) ANVIL	98	
REF	REF	REF	–	A	2-21002-9	SCR, BHC (10-32x.75) CAP	97	
REF	REF	REF	–	A	2-22733-8	SCR, BHC (1/4-20x.62) HOUSING	96	
REF	REF	REF	–	A	2-21002-7	SCR, BHC (10-32x.50) SG ADJ BLOCK	95	
6	6	6	–	A	2-21002-2	SCR, BHC (8-32x.50) TERM H DWN	94	
							93	
							92	
1	1	1	–	A	1-21002-7	SCR, BHC (6-32x.38) CAM	91	
							90	
1	1	–	–	A	7-21000-9	SCR, SHC (4-40x.19) STRIPPER	89	
							88	
2	2	2	–	A	2-21000-7	SCR, SHC (8-32x.48) DEP-HOLD	87	6
1	1	1	–	A	2-22603-0	SCR, HEX HD (8-32x.31) FEED FINGER	86	
2	2	2	–	A	1-21000-3	SCR, SHC (4-40x.25) F ST GUIDE	85	
1	1	1	–	A	2-21000-7	SCR, SHC (8-32x.50) STRIPPER	84	
REF	REF	REF	–	A	3-21000-7	SCR, SHC (10-32x.75) FEED ROD GD	83	
REF	REF	REF	–	A	3-21000-6	SCR, SHC (10-32x.62) FD ADJ BLK	82	
1	1	1	–	A	3-21000-4	SCR, SHC (10-32x.38) SG ADJ BL	81	
REF	REF	REF	–	A	3-21000-4	SCR, SHC (10-32x.38) PIVOT BLK	80	
–	REF	–	–	B	455749-1	GUARD, WINDOW	79	3
REF	–	–	–	B	679532-1	INSERT, GUARD	78	3
							77	
							76	
							75	
1	1	1	–	A	690603-1	SPRING, ASSIST	74	
1	1	1	–	A	23030-1	SCR, SHC (6-32x.25 SL) INS DISC	73	
REF	REF	REF	–	A	458109-1	WASHER, SPECIAL	72	
REF	REF	REF	–	A	690517-1	SPACER	71	
-3	-2	-1	U/M	DWG SIZE	PART NO	DESCRIPTION	ITEM NO	

QTY REQD PER ASSY — PARTS LIST

-1	LEADMAKER			MECH POST FEED				
-2	BENCH MODEL K			MECH PRE FEED				
-3	BENCH MODEL G			MECH PRE FEED				
REF	REF	REF	–	B	22594-8	NUT, HEX (1/2-20)	70	
REF	REF	REF	–	B	240628-1	PLATE, ADJUSTMENT	69	
REF	REF	REF	–	B	240626-1	SHAFT, PIVOT	68	
REF	REF	REF	–	B	240633-1	BUSHING	67	
REF	REF	REF	–	A	455680-1	LEVER, INTERMEDIATE	66	
REF	REF	REF	–	B	240629-1	BLOCK, PIVOT	65	D
REF	REF	REF	–	A	240632-2	SCREW, ADJ FEED ROD	64	
REF	REF	REF	–	B	240659-3	PIN, CAM ROLLER	63	
REF	REF	REF	–	B	240658-1	ROLLER, CAM	62	
REF	REF	REF	–	B	454398-2	ROD, FEED	61	
REF	REF	REF	–	A	454178-1	GUIDE, FEED ROD	60	
REF	REF	REF	–	C	454220-1	CAP, RAM	59	
REF	REF	REF	–	D	454485-1	HOUSING	58	
							57	
1	1	1	–	B	690542-2	PAWL, FEED	56	
REF	REF	REF	–	B	240624-1	PIN, FEED FINGER	55	
REF	REF	REF	–	B	691499-1	SPRING, FEED FINGER	54	
REF	REF	REF	–	B	690541-1	HOLDER, FEED FINGER	53	
REF	REF	REF	–	A	455679-1	LEVER, TERMINAL FEED ARM	52	
1	1	1	–	A	811242-2	BUMPER, HOLDDOWN	51	
1	1	1	–	A	690753-1	SPACER, TONKER	50	
1	–	–	–	B	690602-6	CAM, PRE-FEED 1 5/8 ST	49	
–	1	–	–	B	690602-5	CAM, PRE-FEED 1 1/8 ST	48	
–	–	1	–	B	690501-4	CAM, POST-FEED 1 5/8 ST	47	
1	1	1	–	B	459456-1	APPLICATOR, BASIC (SUBASSY)	46	
1	1	1	–	A	690191-1	PLUG, NYLON	45	
1	1	1	–	C	455673-1	RAM	44	
1	1	1	–	A	690125-1	WASHER, LAMINATED	43	C
1	1	1	–	A	690124-1	WASHER, RAM	42	
1	1	1	–	A	7-21002-9	BOLT, CRIMPER (5/16x1.00)	41	
1	1	1	–	A	23241-6	BALL, STEEL	40	
1	1	1	–	A	690170-1	SPRING, COMPRESSION	39	
1	1	1	–	C	690142-1	DISC, INSULATION	38	
1	1	1	–	D	354777-1	WIRE DISC, PLASTIC	37	
1	1	1	–	A	22480-5	WASHER, SPRING	36	
1	1	1	–	B	690212-1	POST, RAM	35	
1	1	1	–	B	1-690786-0	SUPPORT, TERMINAL	34	
REF	REF	REF	–	D	455675-1	PLATE, BASE	33	
1	1	1	–	A	690432-3	SCREW, ADJUSTMENT	32	
							31	
REF	REF	REF	–	B	455689-1	BLOCK, STRIP GUIDE ADJ	30	
1	1	1	–	C	1-458144-3	PLATE, STRIP GUIDE	29	
1	1	1	–	C	1-455888-0	SPACER, FRONT SHEAR DEP	28	
2	2	2	–	A	1-22284-0	SPRING, DRAG	27	
1	1	1	–	B	240793-1	LEVER, DRAG RELEASE	26	
1	1	1	–	B	240792-1	DRAG, TERMINAL	25	
1	1	1	–	D	690504-3	GUIDE, STRIP (REAR)	24	
1	1	1	–	A	690438-1	GUIDE, STRIP (FRONT)	23	
–	–	1	–	B	690472-2	STRIPPER	22	
REF	REF	REF	–	A	4-22284-9	SPRING, FEED RETURN	21	B
1	1	–	–	A	679218-1	STRIPPER WIRE STOP ASSY	20	
1	1	–	–	B	458949-1	STRIPPER	19	
							18	
							17	
1	1	1	–	B	318563-1	GUARD, CHIP, FRONT	16	
							15	
							14	
							13	
1	1	1	–	A	5-22280-0	SPRING, SHEAR	12	
1	1	1	–	B	690461-1	STOP, SHEAR	11	
1	1	1	–	C	690459-1	HOLDER, SHEAR (FRONT)	10	
1	1	1	–	C	454276-1	SHEAR, FLOAT (FRONT)	9	
1	1	1	–	C	8-683403-0	ANVIL	8	
							7	
							6	
1	1	1	–	C	455889-9	DEPRESSOR, SHEAR (FRONT)	5	
1	1	1	–	B	2-238011-2	SPACER, BLOCK CRIMPER	4	
1	1	1	–	C	6-683454-8	CRIMPER, INSULATION	3	
1	1	1	–	C	455888-5	SPACER, CRIMPER	2	
1	1	1	–	C	3-456404-0	CRIMPER, WIRE	1	
-3	-2	-1	U/M	DWG SIZE	PART NO	DESCRIPTION	ITEM NO	

QTY REQD PER ASSY — REVISION OF EACH ASSY NO (WHEN BLANK, USE DWG REVISION) — PARTS LIST

680221

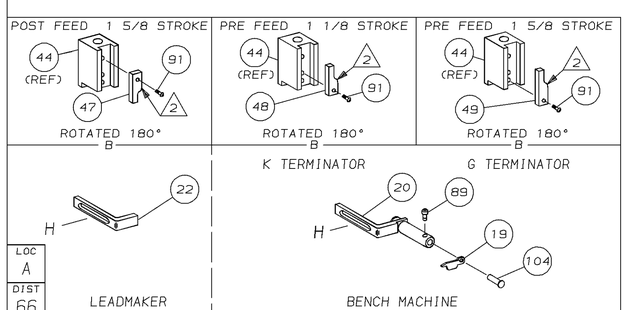

1. RECOMMENDED SPARE PARTS.
2. GREASE LIGHTLY.
3. GUARD MUST BE IN PLACE WHEN OPERATING APPLICATOR IN A BENCH MACHINE.
4. LUBRICATE DAILY USING NO. 20 MACHINE OIL.
5. ITEMS WITH QTY OF REF SPECIFIED (EXCEPT ITEMS 78 AND 79) ARE USED ON ITEM 46.
6. CUT TO LENGTH AT ASSY

P	F	LTR	REVISION RECORD	APP	DATE
		A	REVISED	CE	1-96

DIMENSIONS IN INCHES. DO NOT SCALE PRINT. TOLERANCES UNLESS OTHERWISE SPECIFIED, 2 PLC DEC ±- 3 PLC DEC ±- 4 PLC DEC ±- ANGLES ±- SURF TEXTURE. √ REMOVE BURRS, BREAK SHARP EDGES R.015 MAX

MATL – | HT TR – | FIN –

DR J.BAKER 11-15-95 | APP A BEDDICK 11/15/95 | CHK C.ERISMAN 11/15/95 | REL B. MORGAN 2/14/96

AMP Incorporated Harrisburg, PA 17105-3608

NAME SIDE FEED HDM APPLICATOR | MACHINE MINI | REF APPL

SCALE – | D | DWG NO 680221 | SHEET 1 OF 1 | REV A

THIS DRAWING IS A CONTROLLED DOCUMENT FOR AMP INCORPORATED. IT IS SUBJECT TO CHANGE AND THE CONTROLLING ENGINEERING ORGANIZATION SHOULD BE CONTACTED FOR THE LATEST REVISION.

THIS INFORMATION IS CONFIDENTIAL AND IS DISCLOSED TO YOU ON CONDITION THAT NO FURTHER DISCLOSURE IS MADE BY YOU TO OTHER THAN AMP PERSONNEL WITHOUT WRITTEN AUTHORIZATION FROM AMP INCORPORATED, HARRISBURG, PA.