FILE NO.	70618 C		
REVISIONS			
LTR.	D.C.N. NO. OR CHANGE	BY	DATE

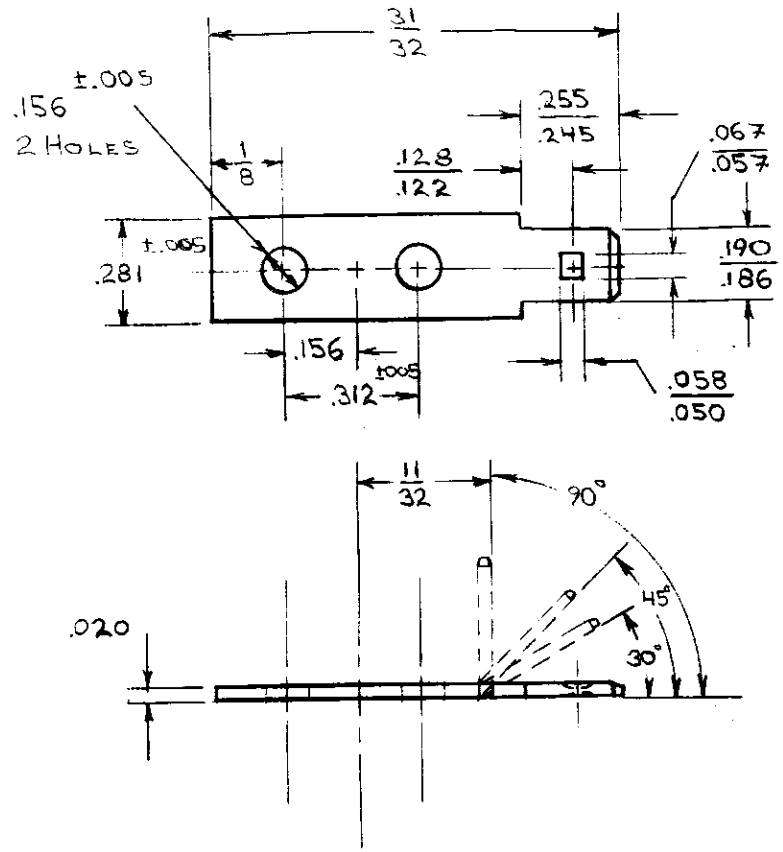

PART NUMBER	ANGLE
3729	0°
3730	30°
3731	45°
3732	90°

MATERIAL: BRASS

PLATING: ELECTRO-TIN

DIMENSIONAL TOLERANCES UNLESS OTHERWISE SPECIFIED			REFERENCE	SCALE: NONE	DATE	TITLE: QUICK DISCONNECT SINGLE END .187	ETC molex INCORPORATED
FRAC.	DEC.	ANG.		DRWN. BY: GZ	6-20-84		
±	±	±		CHKD. BY: PDH	6-20-84		DWG. NO. A SEE TABLE
				APPRD. BY:			