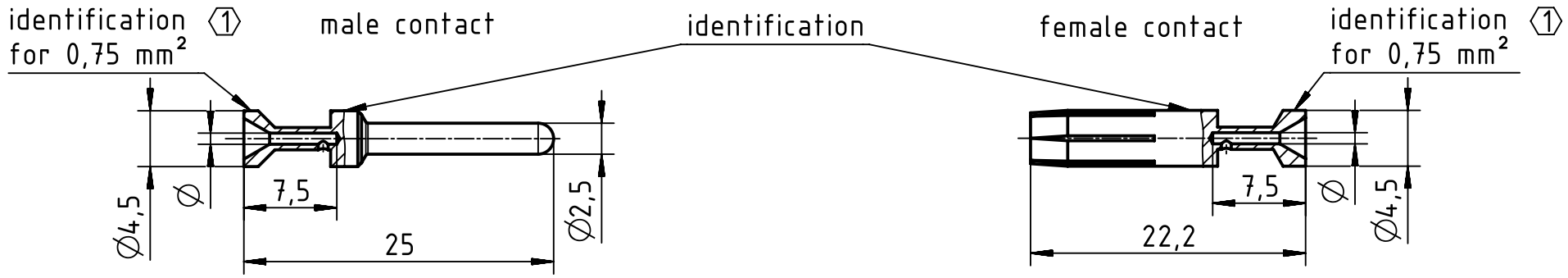

Part no. 09 33 000 .... Gold Tec male contact	female contact	Ø	Wire gauge mm²	AWG	Stripping length	Identification	Recommended crimping tools 09 99 000 0888	09 99 000 0001	09 99 000 0110	09 99 000 0021
6327	6427	0,9	0,14-0,37	26-22	7,5	no groove	X	X		
6320	6420	1,15	0,5	20		no groove	X	X	X	X
6314	6414	1,3	0,75	18		1 groove ⟨1⟩	X	X	X	X
6305	6405	1,45	1			1 groove	X	X	X	X
6304	6404	1,75	1,5	16		2 grooves	X	X	X	X
6302	6402	2,25	2,5	14		3 grooves	X	X	X	X
6306	6406	2,55	3	12		1 wide groove	X	X	X	
6307	6407	2,85	4			no groove	X	X	X	

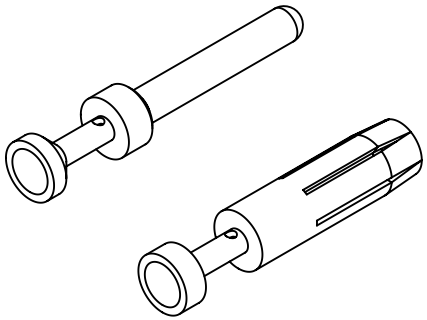

All Dimensions in mm
Original Size DIN A4

Scale 2:1

Free size tol.

Ref.
Sub. 0933000642X v. 16.06.15

All rights reserved

Department EL PD

HARTING Electric GmbH & Co. KG
D-32339 Espelkamp

Created by FINKEV | Inspected by NICHTERLEIN | Standardisation RUETERA | Date 2019-01-18 | State Final Release

Title Han E GoldTec contacts male/female

Doc-Key / ECM-Nr. 100088681/UGD/006/B 500000145820

Type TB | Number 09 33 000 6YYY | Rev. B | Page 1/1

A4