Aug.1.2023 Copyright2023 HIROSE ELECTRIC CO., LTD. ALL RIGHTS Reserved.
In case of consideration for using Automotive equipment/device which demand high reliability, kindly contact our sales window correspondents.

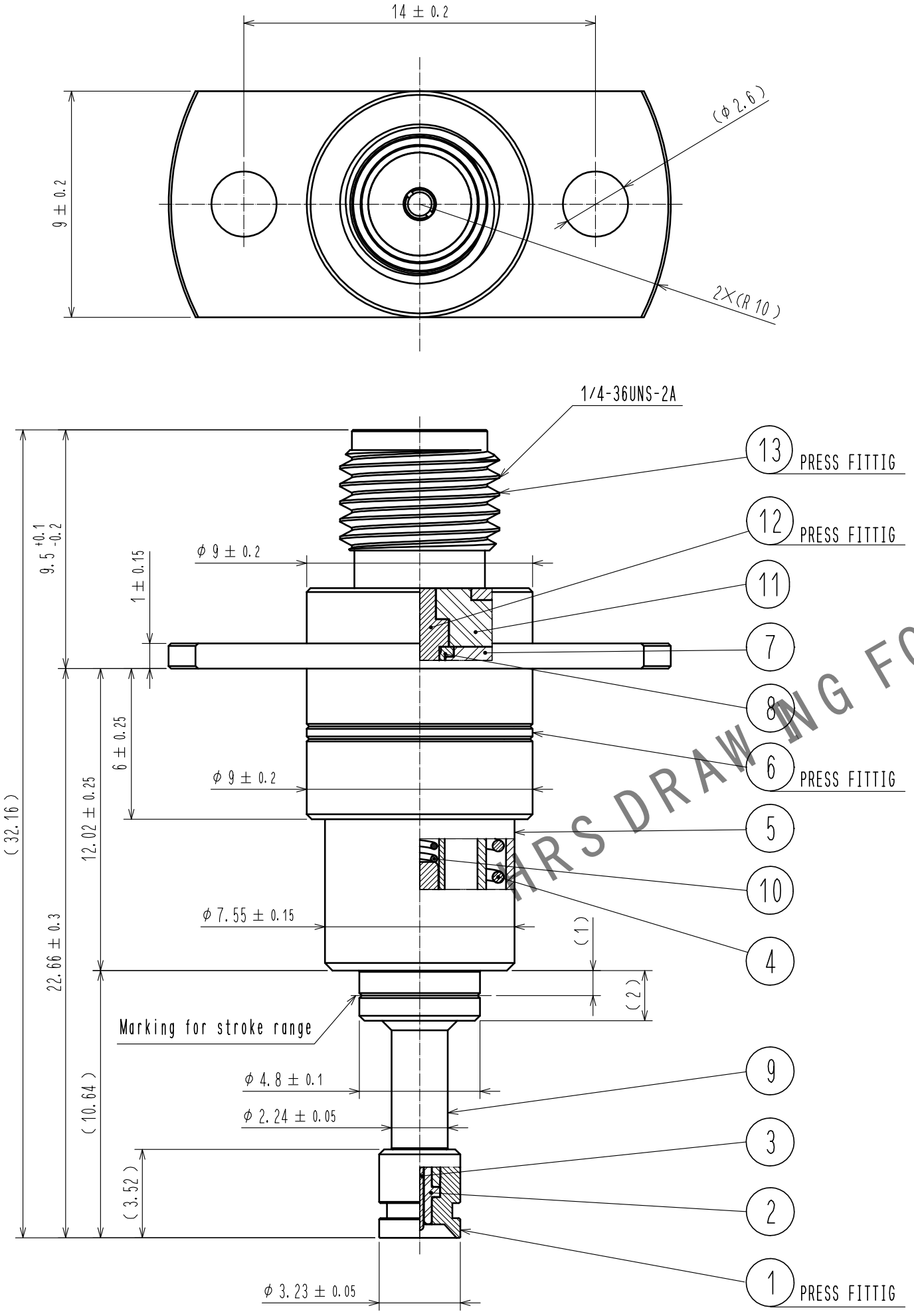

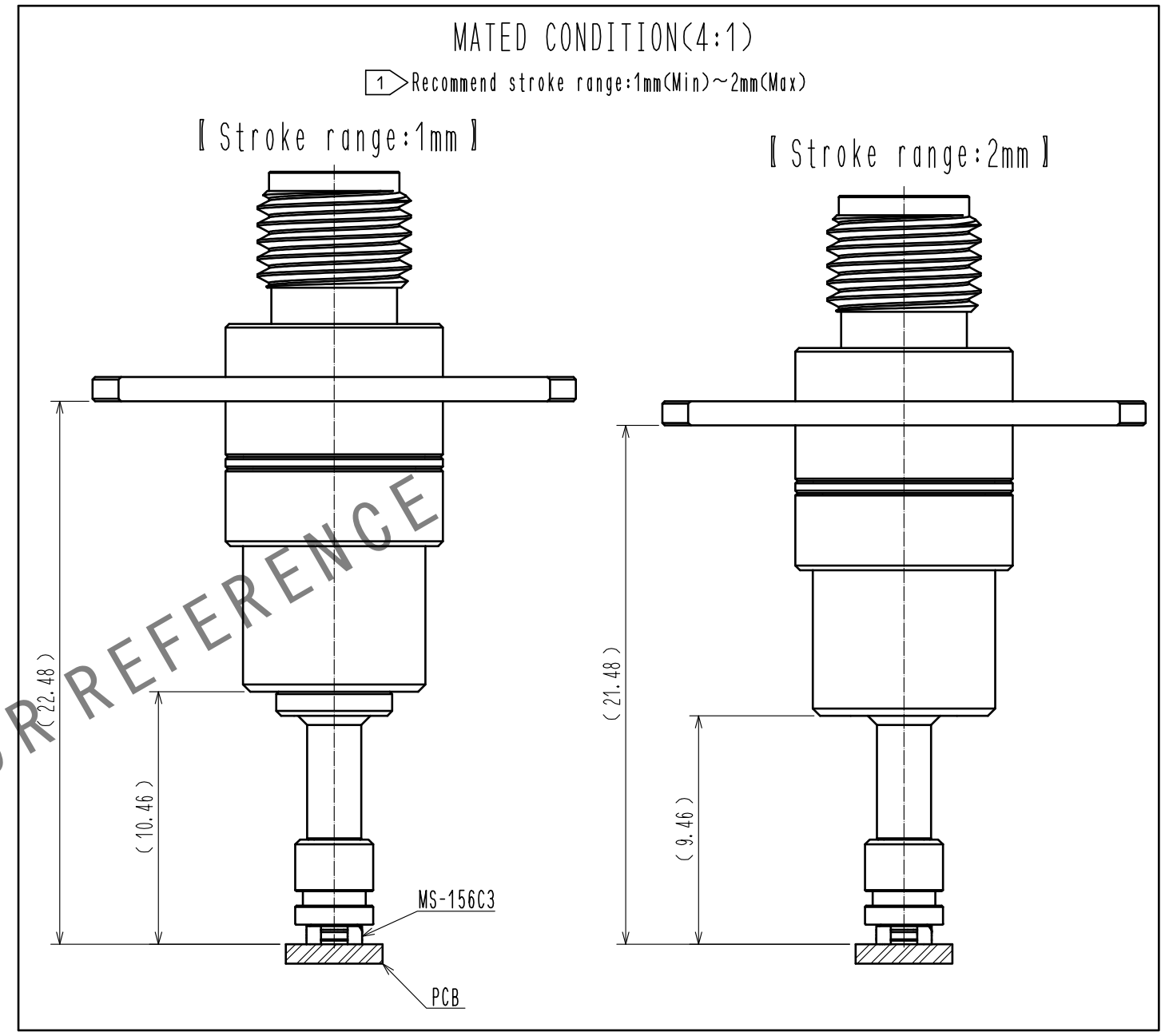

HRS DRAWING FOR REFERENCE

Note. 1 Please mate this product (MS-156-HRMJ-F6) vertically to the receptacle (MS-156C3) within the the recommend stroke range.

RoHS COMPLIANT

NO.	MATERIAL	FINISH , REMARKS	NO.	MATERIAL	FINISH , REMARKS
7	PTFE				
6	BERYLLIUM COPPER	GOLD PLATING	13	STAINLESS STEEL	PASSIVATE
5	PHOSPHOR BRONZE	NICKEL PLATING	12	BERYLLIUM COPPER	GOLD PLATING
4	PIANO WIRE	NICKEL PLATING	11	PTFE	
3	BERYLLIUM COPPER	GOLD PLATING	10	PIANO WIRE	GOLD PLATING
2	PTFE		9	BERYLLIUM COPPER	GOLD PLATING
1	STAINLESS STEEL	GOLD PLATING	8	BERYLLIUM COPPER	GOLD PLATING

UNITS	SCALE	COUNT	DESCRIPTION OF REVISIONS	DESIGNED	CHECKED	DATE
mm	5 : 1	0				

HRS HIROSE ELECTRIC CO., LTD.

APPROVED	: KH. IKEDA	16.03.16	DRAWING NO.	EDC-360551-00-00
CHECKED	: NK. NINOMIYA	16.03.16	PART NO.	MS-156-HRMJ-F6
DESIGNED	: RO. FURUYAMA	16.03.16	CODE NO.	CL358-0352-0-00
DRAWN	: RO. FURUYAMA	16.03.16		0 1/1

FORM HC0011-5-7