THIS DRAWING IS UNPUBLISHED. RELEASED FOR PUBLICATION 20
© COPYRIGHT 20 BY TYCO ELECTRONICS CORPORATION. ALL RIGHTS RESERVED.

PART NUMBER	REV	TERMINATOR	FEED TYPE	DESCRIPTION
1528685-1	A	LEADMAKER	MECH POST FEED	CUTS CARRIER
1528685-2	A	BENCH	MECH PRE FEED	CUTS CARRIER
1528685-6	A	LEADMAKER	MECH POST FEED	CONTINUOUS CARRIER
7-1528685-1	A	LEADMAKER	MECH POST FEED	-1 AND SPARE PARTS
7-1528685-2	A	BENCH	MECH PRE FEED	-2 AND SPARE PARTS
7-1528685-6	A	LEADMAKER	MECH POST FEED	-6 AND SPARE PARTS
7-1528685-7	A	-	-	SPARE PARTS KIT

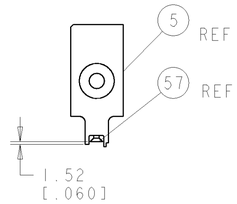

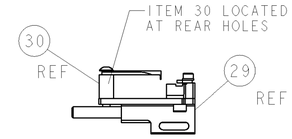

FEED TRACK POSITION
GUIDE BY WIRE BARREL

TERMINAL SUPPORT
LOCATION

CRIMP DATA	LEAR GHW TERMINAL		LEAR CRIMP SPEC 5
TERMINAL NAME: RAM PLUS PIN CONTACT			
CRIMP	SIZE	TYPE	RANGE
WIRE	2.79 [.110 IN]	F	1.50-2.50mm²
INSUL	4.06 [.160 IN]	O	2.10-2.80 [.083-.110 IN] 6
WIRE STRIP LENGTH 5.00 [.197 IN]			APPL INSTRUCTIONS 408-8322 & 408-8490
TERMINAL APPL SPEC	LEAR DATA SHT. - 26034 5 -		FEED 8.90 [.350 IN]

TERMINALS APPLIED

TYCO TERM PN	MANUF TERM PN	TYCO SEAL PN	MANUF SEAL PN
1949094-1	26034.201.179	1949095-1	16694.627.626
-	-	-	-
-	-	-	-
-	-	-	-

WIRE SIZE	CRIMP HEIGHT *	REF SETTING *
2.50 mm²	1.70 ±0.05 [.067 ±.002 IN]	B0
1.50 mm²	1.45 ±0.05 [.057 ±.002 IN]	C7
-	-	-
-	-	-
-	-	-
-	-	-
-	-	-
-	-	-
-	-	-
-	-	-
-	-	-
-	-	-

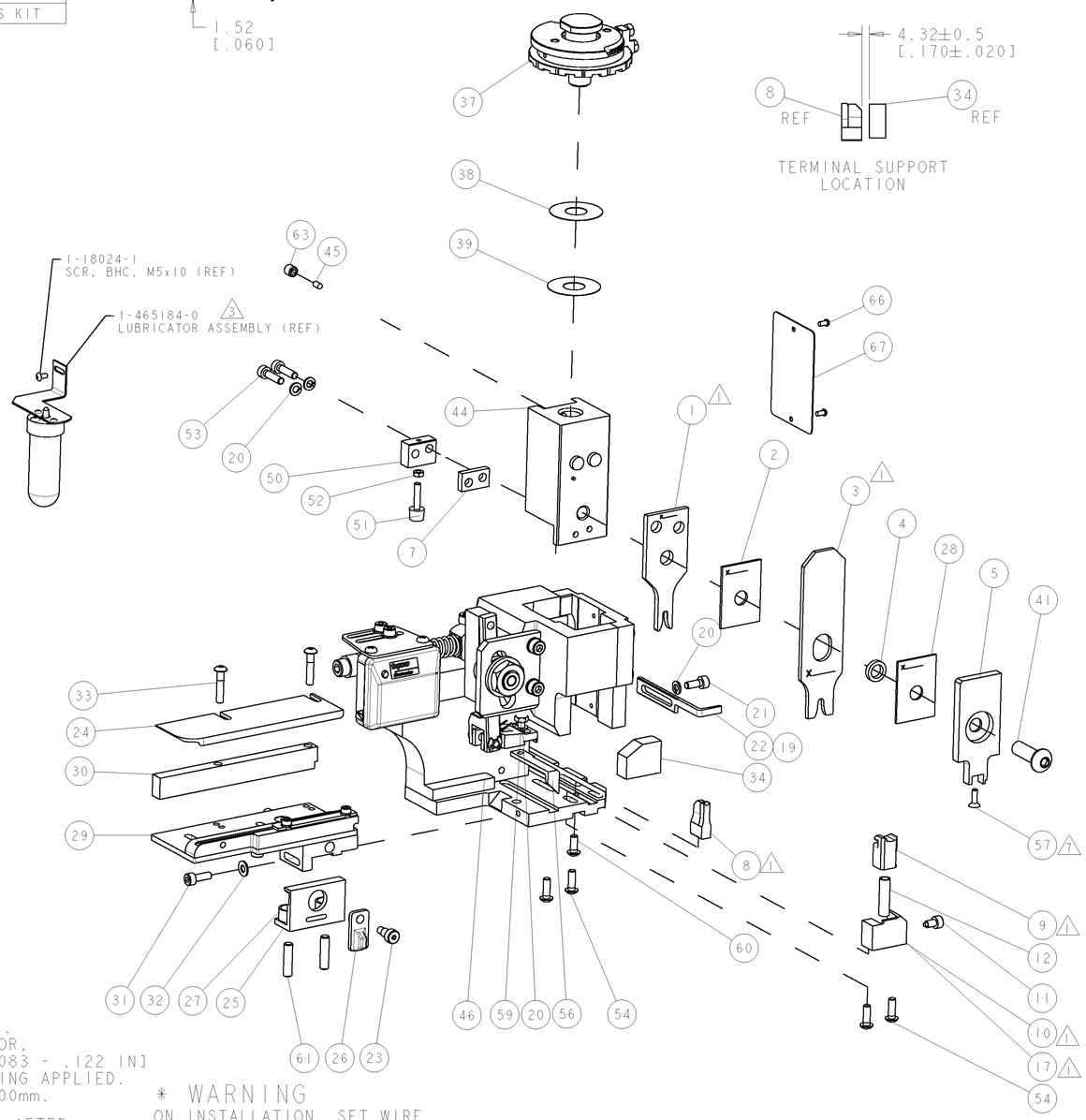

1. RECOMMENDED SPARE PARTS.
2. GREASE RAM, CAM, CAM FOLLOWER AND FEED ROD LIGHTLY.
3. CERTAIN TERMINALS REQUIRE LUBRICATION. REFER TO THE APPLICATOR INSTRUCTION SHEET FOR MORE INFORMATION.
4. LUBRICATE DAILY PER THE APPLICATOR INSTRUCTION SHEET SUPPLIED WITH THE APPLICATOR.
5. ALL CRIMP DATA SUPPLIED BY TERMINAL MANUFACTURER.
6. THIS APPLICATOR APPLIES TERMINAL WITH A SEAL. INSULATION RANGE QUOTED IS THAT OF APPLICATOR, TERMINAL INSULATION RANGE IS 2.10 - 3.10 [.083 - .122 IN] WIRE INSULATION DIA IS DEPENDENT ON SEAL BEING APPLIED. SEAL PN 1949095-1 INS. DIA RANGE IS -1.9-3.00mm.
7. APPLY TORQ-SEAL IN ALLEN SOCKET TO FILL HOLE AFTER FLAT HD HAS BEEN ADJUSTED TO CORRECT HEIGHT AT QUALIFICATION. APPLY #1-23419-5 LOC-TITE TO THREADS.

* WARNING
ON INSTALLATION, SET WIRE DISC TO LARGEST WIRE SIZE SETTING. USE OF SETTINGS BELOW MIN. REQUIRED CRIMP HEIGHT SETTING WILL CAUSE DAMAGE TO CRIMP TOOLING.

VIEW B ROTATED 180°

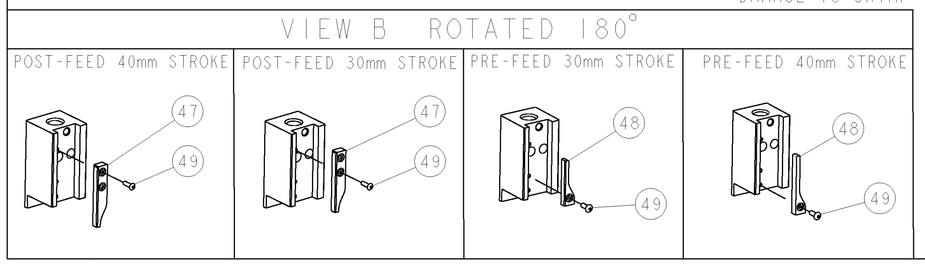

-77	-76	-72	-71	-6	-2	-1	PART NO	DESCRIPTION	ITEM NO
-	-	-	-	-	-	-	-	-	83
-	-	-	-	-	-	-	-	-	82
-	-	-	-	-	-	-	-	-	81
-	-	-	-	-	-	-	-	-	80
-	-	-	-	-	-	-	-	-	79
-	-	-	-	-	-	-	-	-	78
-	-	-	-	-	-	-	-	-	77
-	-	-	-	-	-	-	-	-	76
-	-	-	-	-	-	-	-	-	75
-	-	-	-	-	-	-	-	-	74
-77	-76	-72	-71	-6	-2	-1	PART NO	DESCRIPTION	ITEM NO

SET UP GAGE 458637-3

LOC	DIST
A	66

REVISIONS

P	LTR	DESCRIPTION	DATE	DWN	APVD
	A	SEE ECO-06-019922	21AUG2006	DP	MC

-	-	-	-	-	-	-	-	-	73
-	-	-	-	-	-	-	-	-	72
-	1	1	1	1	1	1	1338705-3	DOCUMENTATION PACKAGE	71
-	-	-	-	-	-	-	-	-	70
-	-	-	-	-	-	-	-	-	69
-	-	-	-	-	-	-	-	-	68
-	1	1	1	1	1	1	461264-5	PLATE, IDENTIFICATION	67
-	2	2	2	2	2	2	21017-2	SCREW, DRIVE	66
-	-	-	-	-	-	-	-	-	65
-	-	-	-	-	-	-	-	-	64
-	1	1	1	1	1	1	3-18031-0	SCR, SET, CUP POINT M6 X 6.0	63
-	-	-	-	-	-	-	-	-	62
-	2	2	2	2	2	2	2-18032-5	SCR, SET, FLT POINT M5 X 20.0	61
-	1	1	1	1	1	1	18024-7	SCR, BTN SKT HD CAP (M4 X 10.0)	60
-	1	1	1	1	1	1	5-18022-2	SCR, HEX HD CAP M4 X 8.0	59
-	-	-	-	-	-	-	-	-	58
-	1	1	1	1	1	1	985575-3	SCR, FLT SKT HD CAP M3 X 10.0	57
-	1	1	1	1	1	1	1338685-1	PAWL, FEED	56
-	-	-	-	-	-	-	-	-	55
-	4	4	4	4	4	4	18024-8	SCR, BTN SKT HD CAP (M4 X 12.0)	54
-	2	2	2	2	2	2	1-18023-3	SCR, SKT HD CAP M4 X 16.0	53
-	1	1	1	1	1	1	18030-1	NUT, HEX, REG M3	52
-	1	1	1	1	1	1	811242-5	BUMPER, HOLD DOWN	51
-	1	1	1	1	1	1	690753-2	SPACER, TONKER	50
-	1	1	1	1	1	1	18024-3	SCR, BTN SKT HD CAP (M3 X 10.0)	49
-	-	1	-	-	1	-	1338675-1	CAM, UNIVERSAL PRE FEED	48
-	1	-	1	1	-	1	1338676-1	CAM, UNIVERSAL POST-FEED	47
-	1	1	1	1	1	1	1320999-3	APPLICATOR SUBASSEMBLY, HDI	46
-	1	1	1	1	1	1	690191-1	PLUG,NYLON	45
-	1	1	1	1	1	1	1338660-1	RAM	44
-	-	-	-	-	-	-	-	-	43
-	-	-	-	-	-	-	-	-	42
-	1	1	1	1	1	1	2-18024-6	SCR, BTN SKT HD CAP (M8 X 25.0)	41
-	-	-	-	-	-	-	-	-	40
-	1	1	1	1	1	1	690125-1	SHIM SUB-ASSY	39
-	1	1	1	1	1	1	469367-1	SHIM	38
-	1	1	1	1	1	1	879103-2	FINE ADJUST HEAD SUBASSY	37
-	-	-	-	-	-	-	-	-	36
-	-	-	-	-	-	-	-	-	35
-	1	1	1	1	1	1	2-1320934-2	SUPPORT, TERMINAL	34
-	2	2	2	2	2	2	1-18024-0	SCR, BTN SKT HD CAP (M4 X 20.0)	33
-	1	1	1	1	1	1	18027-2	WASHER, FLAT, REG M4	32
-	1	1	1	1	1	1	1-18023-2	SCR, SKT HD CAP M4 X 12.0	31
-	1	1	1	1	1	1	1320908-8	SPACER, STRIP GUIDE	30
-	1	1	1	1	1	1	1633073-2	STRIP GUIDE ASSEMBLY	29
-	1	1	1	1	1	1	1-455888-0	SPACER, CRIMPER	28
-	2	2	2	2	2	2	1-22284-0	SPRING, COMPRESSION	27
-	1	1	1	1	1	1	356835-1	LEVER, DRAG RELEASE	26
-	1	1	1	1	1	1	240792-1	DRAG, TERMINAL	25
-	1	1	1	1	1	1	1320928-1	PLATE, STRIP GUIDE	24
-	1	1	1	1	1	1	980371-4	SCR, SKT HD SHLDR 5.0 DIA X 6.0	23
-	1	-	1	1	-	1	690472-2	STRIPPER	22
-	1	1	1	1	1	1	1-18023-1	SCR, SKT HD CAP M4 X 10.0	21
-	4	4	4	4	4	4	18025-2	WASHER, SPRG LOCK, REG M4	20
-	-	1	-	-	1	-	690472-1	STRIPPER	19
-	-	-	-	-	-	-	-	-	18
1 -	1	-	-	1	-	-	1338684-2	HOLDER, SHEAR, NO-CUT	17
-	-	-	-	-	-	-	-	-	16
-	-	-	-	-	-	-	-	-	15
-	-	-	-	-	-	-	-	-	14
-	-	-	-	-	-	-	-	-	13
-	1	1	1	1	1	1	3-22280-3	SPRING, COMPRESSION	12
-	1	1	1	1	1	1	356885-5	STOP, SHEAR	11
1 -	-	1	1	-	1	1	1-1320921-0	SHEAR HOLDER, FRONT, CUT	10
1 -	1	1	1	1	1	1	318707-1	FLOATING SHEAR, FRONT	9
1 1	2	2	2	1	1	1	1633134-7	ANVIL, COMBINATION .110	8
-	1	1	1	1	1	1	2-240641-4	SPACER	7
-	-	-	-	-	-	-	-	-	6
-	1	1	1	1	1	1	1338680-5	DEPRESSOR, SHEAR	5
-	1	1	1	1	1	1	3-238011-3	BLOCK, CRIMPER SPACER	4
1 1	2	2	2	1	1	1	1583690-9	CRIMPER, INSUL O	3
-	1	1	1	1	1	1	1-455888-3	SPACER, CRIMPER	2
1 1	2	2	2	1	1	1	2-456408-0	CRIMPER, WIRE PREMIUM	1
-77	-76	-72	-71	-6	-2	-1	PART NO	DESCRIPTION	ITEM NO

THIS DRAWING IS A CONTROLLED DOCUMENT FOR TYCO ELECTRONICS CORPORATION. IT IS SUBJECT TO CHANGE AND THE CONTROLLING ENGINEERING ORGANIZATION SHOULD BE CONTACTED FOR THE LATEST REVISION.

DIMENSIONS: mm [IN]

TOLERANCES UNLESS OTHERWISE SPECIFIED:
0 PLC ±-
1 PLC ±-
2 PLC ±-
3 PLC ±-
4 PLC ±-
ANGLES ±-

MATERIAL - -
FINISH - -

DWN 13JULY06 L.LOFTHOUSE
CHK -
APVD 13JULY06 M.CLIFFORD
PRODUCT SPEC -
APPLICATION SPEC - See Table
WEIGHT -

tyco Electronics
Tyco Electronics
Harrisburg, PA 17105-3608

NAME FINE ADJUST SIDE FEED HDI APPLICATOR -

SIZE	CAGE CODE	DRAWING NO	RESTRICTED TO
A1	00779	C-1528685	-

CUSTOMER DRAWING SCALE 3:5 SHEET 1 OF 1 REV A