THIS DRAWING IS UNPUBLISHED. RELEASED FOR PUBLICATION -,- .
© COPYRIGHT - BY TYCO ELECTRONICS CORPORATION. ALL RIGHTS RESERVED.

| LOC | DIST |
|---|---|
| AD | 47 |

REVISIONS

| P | LTR | DESCRIPTION | DATE | DWN | APVD |
|---|---|---|---|---|---|
| | D2 | REVISED PER ECO-08-009057 | 16APR08 | DH | AS |

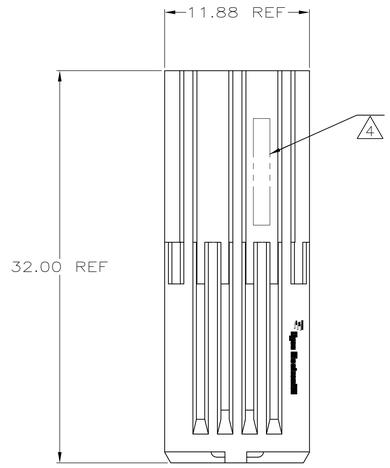


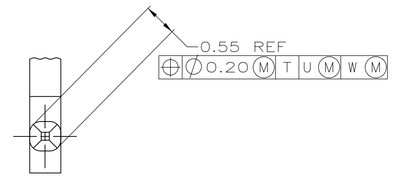


DETAIL W
SCALE 10:1

1. HOUSING MATERIAL: LIQUID CRYSTAL POLYMER, COLOR: NATURAL.
2. CONTACT MATERIAL: PHOSPHOR BRONZE.
3. CONTACT FINISH:
   UNDERPLATE (ENTIRE CONTACT):
   0.00127 MIN NICKEL.
   ON MATING SURFACES:
   CONFORMS TO ALL TESTING SPECIFIED FOR TELCORDIA UNCONTROLLED ENVIRONMENT.
   ON LEADS
   0.00381 MIN TIN-LEAD OVER UNDERPLATE.
   LUBRICATION (ENTIRE CONTACT):
   SURFACE CONDITIONER PER AMP SPEC 112-1002 AFTER PLATING.
4. PART MARKING PER AMP INCORPORATED SPECIFICATION 115-9009, LOCATED APPROXIMATELY AS SHOWN.
5. PART TO BE MARKED WITH DATE CODE ONLY.

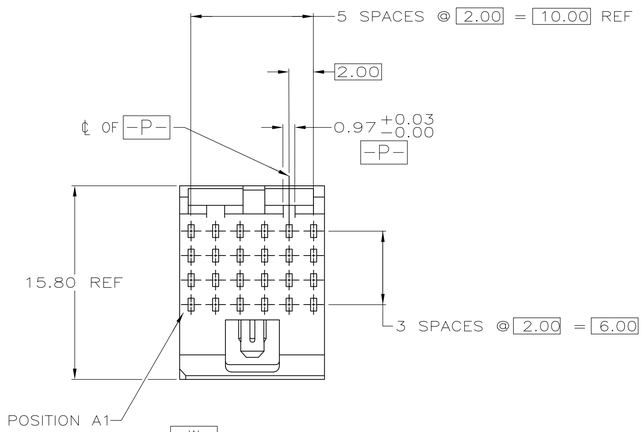


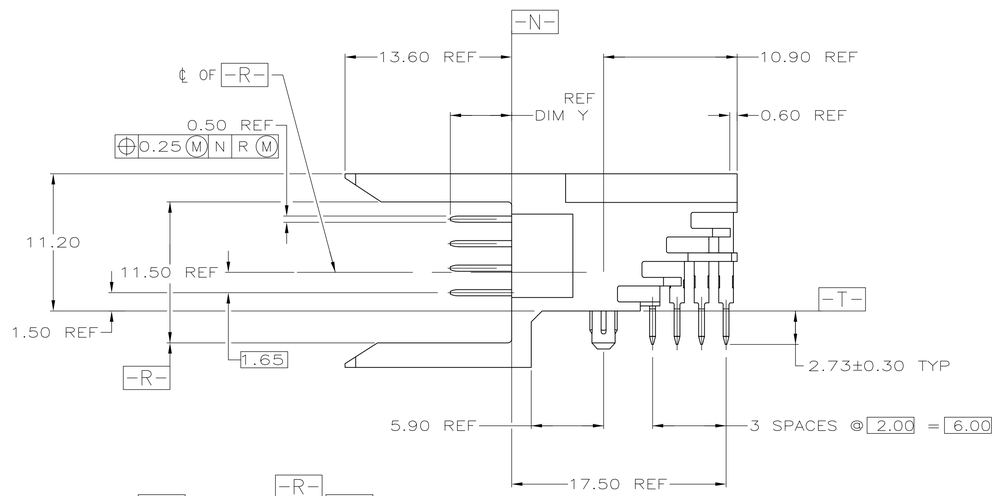


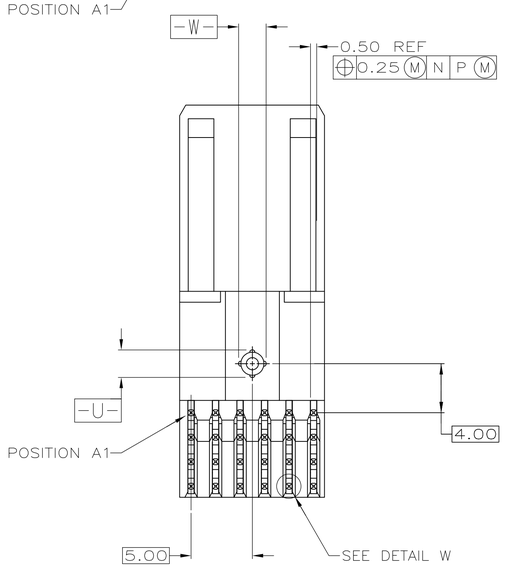


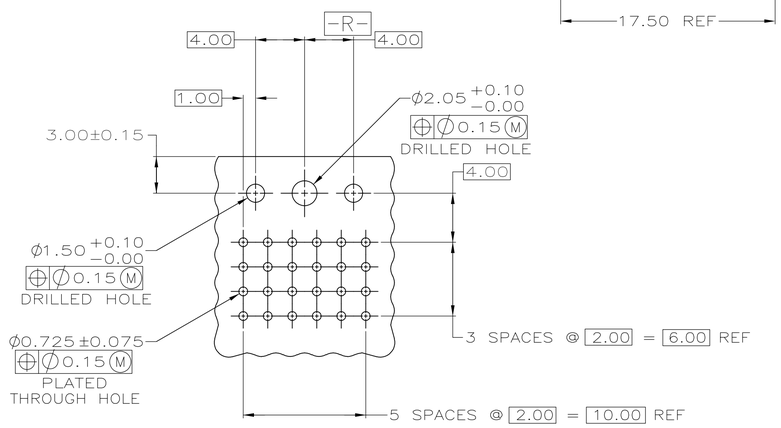


RECOMMEDNED CIRCIUT PATTERN
PER IPC-D300 TYPE II, CLASS C
COMPONENT SIDE

| | |
|---|---|
| 3 | 6.50 |
| 2 | 5.75 |
| 1 | 5.00 |
| CONTACT NUMBER | DIM Y |

| ROW | | | | | | | | | ROW |
|---|---|---|---|---|---|---|---|---|---|
| | D | 2 | 1 | 1 | 1 | 3 | 1 | D | |
| | C | 2 | 1 | 1 | 1 | 3 | 1 | C | |
| | B | 2 | 1 | 1 | 1 | 3 | 1 | B | |
| | A | 2 | 1 | 1 | 1 | 3 | 1 | A | |
| COLUMN | | 1 | 2 | 3 | 4 | 5 | 6 | | COLUMN |

CONTACT LOADING CHART BY ITEM NUMBER

| 5 | 3 | 223532-1 |
|---|---|---|
| | FINISH | PART NUMBER |

THIS DRAWING IS A CONTROLLED DOCUMENT.

DIMENSIONS: mm

TOLERANCES UNLESS OTHERWISE SPECIFIED:
0 PLC ± -
1 PLC ± -
2 PLC ± 0.13
3 PLC ± -
4 PLC ± -
ANGLES ± -

MATERIAL 1 2
FINISH 3

DWN T. SHUEY 3-12-99
CHK C. SCHMID 3-16-99
APVD C. SCHMID 3-16-99
PRODUCT SPEC 108-1441
APPLICATION SPEC 114-1075
WEIGHT -

Tyco Electronics
Tyco Electronics Corporation
Harrisburg, PA 17105-3608

NAME
PIN ASSY,Z-PACK 2mm FB,RIGHT ANGLE, 4 ROW,24 POSITION,SEQUENCED
-

| SIZE | CAGE CODE | DRAWING NO | RESTRICTED TO |
|---|---|---|---|
| A1 | 00779 | C-223532 | - |

CUSTOMER DRAWING | SCALE 4:1 | SHEET 1 OF 1 | REV D2