ITEM NO.	PART NUMBER	DESCRIPTION	QTY.	NOTES
1	50-00039	Connector, stereo jack, 3.5x8.0xL24.7 mm, brass, nickel plated, molding style	1	
2	30-00177	Wire, 2C BC, 28 AWG, 300V, 80C, 3.8 mm, foil + shield, PVC	1	
3	24-00036	Overmold	1	PVC, black
4	heat shrink	black	1	covers stripped end
5	heat shrink	black	1	covers shield

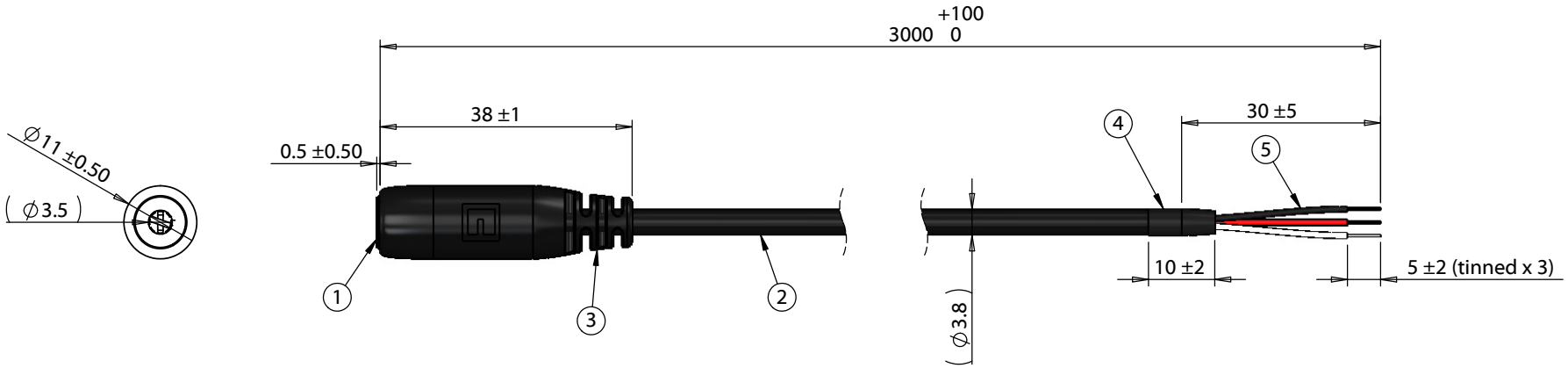

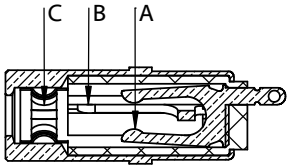

Wiring Diagram	
50-00039	wire color
A	red
B	white
C	shield

Notes:
Functionally equivalent components may be substituted

Revision:	Date:	Description:
A	2/21/2019	Initial release

Prepared: AG Digitally signed by AG Date: 2019.03.12 14:20:37 -07'00'

Verified: GL Digitally signed by GL Date: 2019.03.14 10:17:12 -07'00'

Dimensions are in millimeters.
Tolerances:
X: ± 0.5 mm
X.X: ± 0.3 mm
X.XX: ± 0.05 mm

Notes:

RoHS compliant

Function test: no open, no short circuit, no intermittent

Description:

Cable, 3000 mm, 3.5 mm 3C 50-00039 audio jack to 5 mm tinned, 28 AWG, 30-00177 wire

TENSILITY
tel 1.541.323.3228 800 877.670.7118
fax 1.541.323.4202 web tensility.com

Size: A
Part number: 10-03208
Scale: 1:1
Sheet 1 of 1

5 4 3 2 1

To see a custom version of this cable assembly, call Tensility at 541-323-3228 or email engineering@tensility.com