THIS DRAWING IS UNPUBLISHED. RELEASED FOR PUBLICATION
© COPYRIGHT BY TYCO ELECTRONICS CORPORATION ALL RIGHTS RESERVED.

LOC	CHST
GP	00

REVISIONS

P	LTR	DESCRIPTION	DATE	DRN	APVD
	C	REVISED PER EC 0513-0512-03	05MAR04	BM	JG

1 THIS PART WILL FIT ANY SIZE 5 PLUG OR RECEPTACLE IN THE AMPLIMITE SERIES CONNECTOR.

2 ALL PARTS ARE PACKAGED UNASSEMBLED.

3 ONE KIT PER POLY BAG.

4 SAME AS -1 EXCEPT BULK PACKAGED.

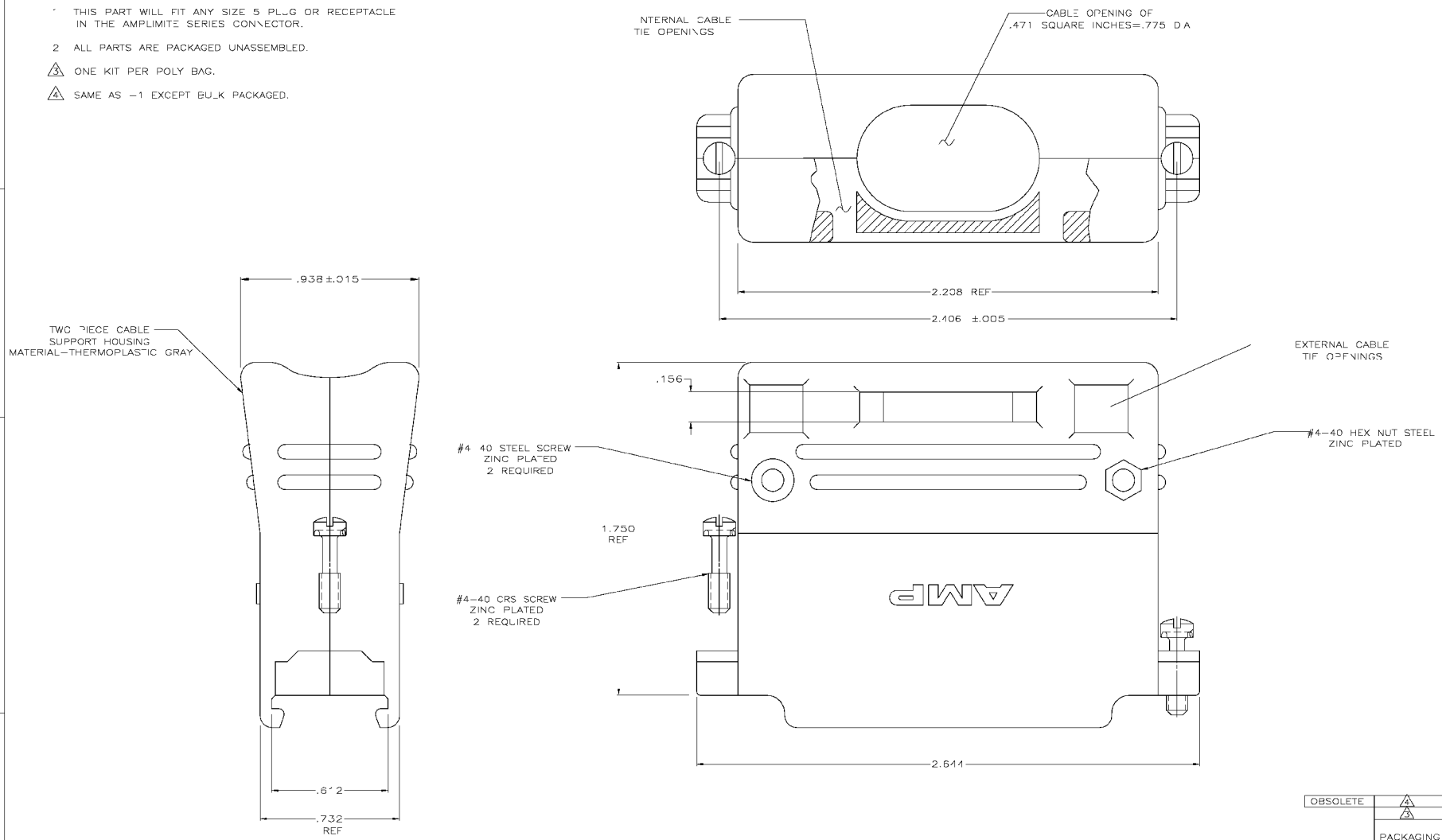

OBSOLETE	4	745082-2
	3	745082-1
PACKAGING		PART NUMBER

THIS DRAWING IS A CONTROLLED DOCUMENT.

DIMENSIONS: INCHES

TOLERANCES UNLESS OTHERWISE SPECIFIED:
DECIMAL ±.—
1 PLC ±.—
2 PLC ±.—
3 PLC ±.010
4 PLC ±.—
ANGLES ±.—

MATERIAL: SEE CALLOUT
FINISH: SEE CALLOUT

DWN B. MCMASTER 05MAR04
CHK C. RICHUL 05MAR04
APVD M. WALMSLEY 05MAR04

PRODUCT SPEC —
APPLICATION SPEC —
WEIGHT —

CUSTOMER DRAWING

Tyco Electronics Corporation
Harrisburg, Pa 17105-3608

NAME: CABLE SUPPORT ASSEMBLY, SIZE 5, 50 POSN, 90 DEGREES/180 DEGREES, AMPLIMITE® HD-20

SIZE	CAGE CODE	DRAWING NO	RESTRICTED TO
A1	00779	C-745082	—

SCALE 4:1 SHEET 1 OF 1 REV C