DIMENSIONS:	
A	3.125" ±0.063
B	3.185" ±0.125
C	3.795" ±0.063
D	2.500" ±0.063
E	1.938" ±0.063
G	0.203" X 0.400" ±0.015

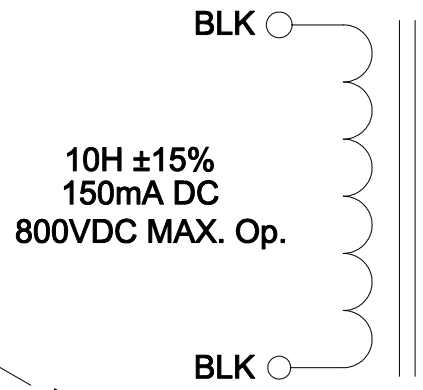

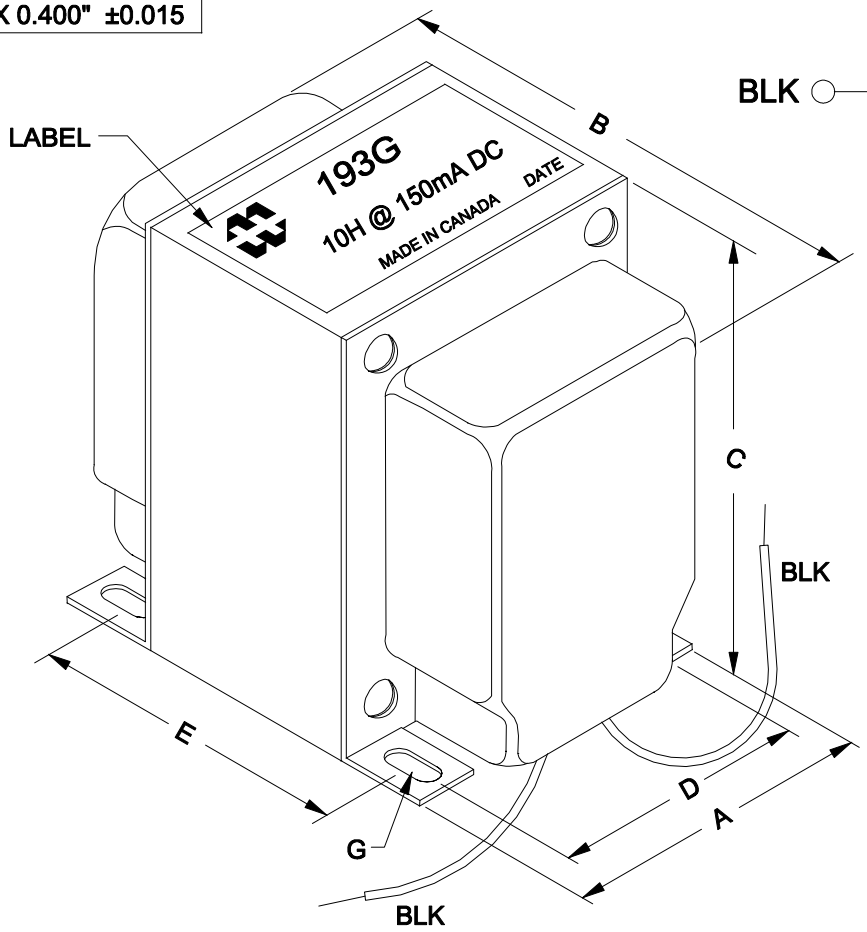

NOTE: ALL LEADS 8" OUT MIN., STRIPPED .5"

ELECTRICAL DATA:

TESTS	CONDITIONS	ACCEPTANCE CRITERIA
INDUCTANCE	@ 30V, 60Hz, 150mA DC, BLK - BLK	10H ±15%
DCR	@ 20°C, BLK - BLK =	102.5 Ω ±15%
HIPOT	PRMARY - SECONDARY	2000V, 60Hz, 1 SEC

HAMMOND MANUFACTURING T.M.

ELECTRONIC DIVISION
52 RANKIN PLACE,
WATERLOO, ONTARIO, N2J 3Z5
PH # (519) 886-6181
FAX # (519) 886-9540

TITLE: INDUCTOR

NO	DATE	REVISION	
0	03/05/15	RELEASED.	C.I.

DWG. BY: CORINA ILIE
DATE: 03/05/15
DIM IN(X)MM( )

193G