This document is the property of Amphenol Corporation and is delivered on the express condition that it is not to be disclosed, reproduced or used, in whole or in part, for manufacture or sale by anyone other than Amphenol Corporation without its prior concert, & that no right is granted to disclose or to use any information in this document.

CUSTOMER DRAWING

REVISIONS				
SYM	ECN	DESCRIPTION	DATE	APPROVED
2	HK7488	ADD PLATING INFORMATION	11/21'16	IP

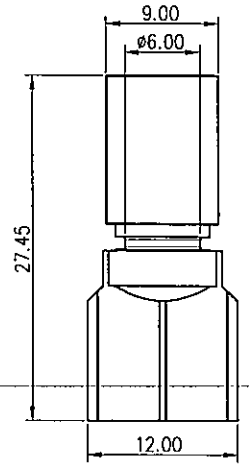

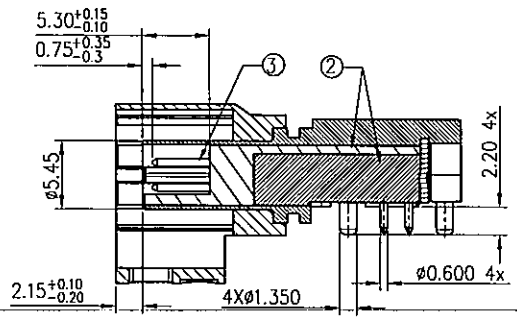

SECTION A–A

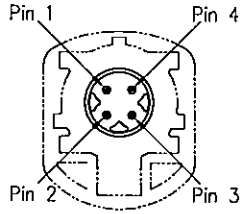

Pinning standard

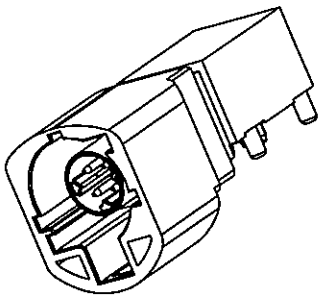

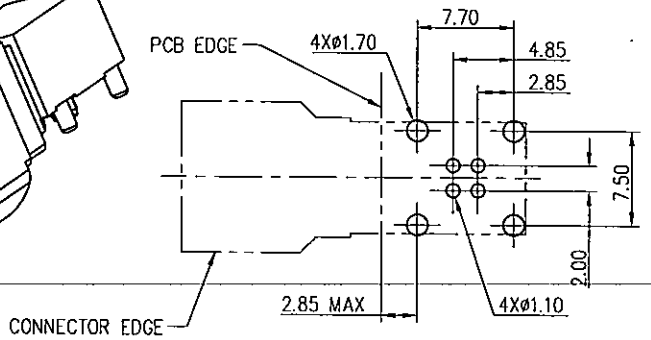

RECOMMENDED PCB LAYOUT TOP VIEW
TOLERANCE: ±0.05(PCB THICKNESS=1.6±0.15mm)

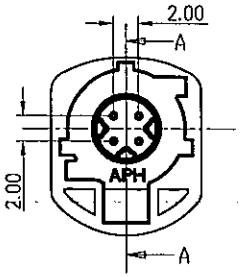

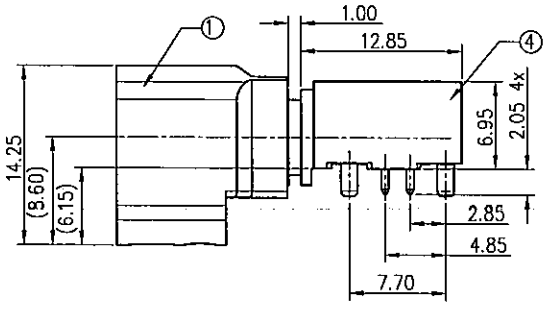

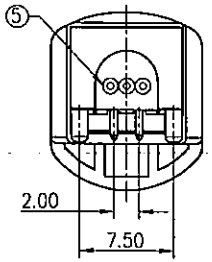

Notes:

1. Material:
   - ①Housing: High temperature thermoplastic,color see table 1.
   - ②Dielectrics: High temperature thermoplastic,color black.
   - ③Center contact: Copper alloy.
   - ④Outer contact : Zinc alloy.
   - ⑤Cover: Stainless Steel.
2. Finish:
   - ③Center contact: Gold plated 0.15um min. on contact area & gold flash on soldering tail over 1um min. Ni underplating;
   - ④Outer contact : 4um Min. Solderable Ni plated over 10~17um Cu underplating.
4. RoHs compliant.
5. Order P/N system:

HSD SXRP PCB 12X

Coding: See table 1

Packing method:
- A– Packing by tape & reel
- B– Packing by tray
- C– Single Packing

Table 1

Plug	Coding	Color	Ral
	A	Black	9005
	B	White	9001
	C	Blue	5005
	D	Claret	4004
	E	Green	6002
	F	Brown	8011
	Z	Waterblue	5021

Plug	Coding	Color	Ral
	G	Grey	7031
	H	Violet	4003
	J	Beige	1001
	K	Curry	1027
	L	Yellow green	6018
	M	Pastel orange	2003
	O	Light green	6027

Amphenol Shenzhen RoHS Compliant 2011/65/EU

UNLESS OTHERWISE SPECIFIED TOLERANCES

U.S.	METRIC
.X +/−	0.50
.XX +/−	0.25
.XXX +/−	0.20
FRACTIONS +/−	
ANGLES +/−	5°

FOR MATERIALS AND FINISHES SEE NOTES
REMOVE SHARP EDGES
DIMENSIONS: U.S. / INCHES; METRIC / MM

APPROVAL		DATE
DRAWN	KAKA.Y	11/21'16
CHECKED		11/21'16
CHECKED		

DRAWING FILE :
ANGLE OF PROJECTION

Amphenol

TITLE
HSD R/A PLUG LOW PROFILE CONNECTOR SOUTH LOCATION

SIZE	DRAWING NO.	REV.
A4	HSD SXRP PCB 12X	2
SCALE 1:1		SHEET 1 OF 1