REVISIONS			
REV	DESCRIPTION, ECN, EAR NO.	DATE	APP'D
F	FILLETS ADDED	SEP02/20	S.M
G	PRODUCT DRAWING (EAR 15044)	APR29/22	M.P.

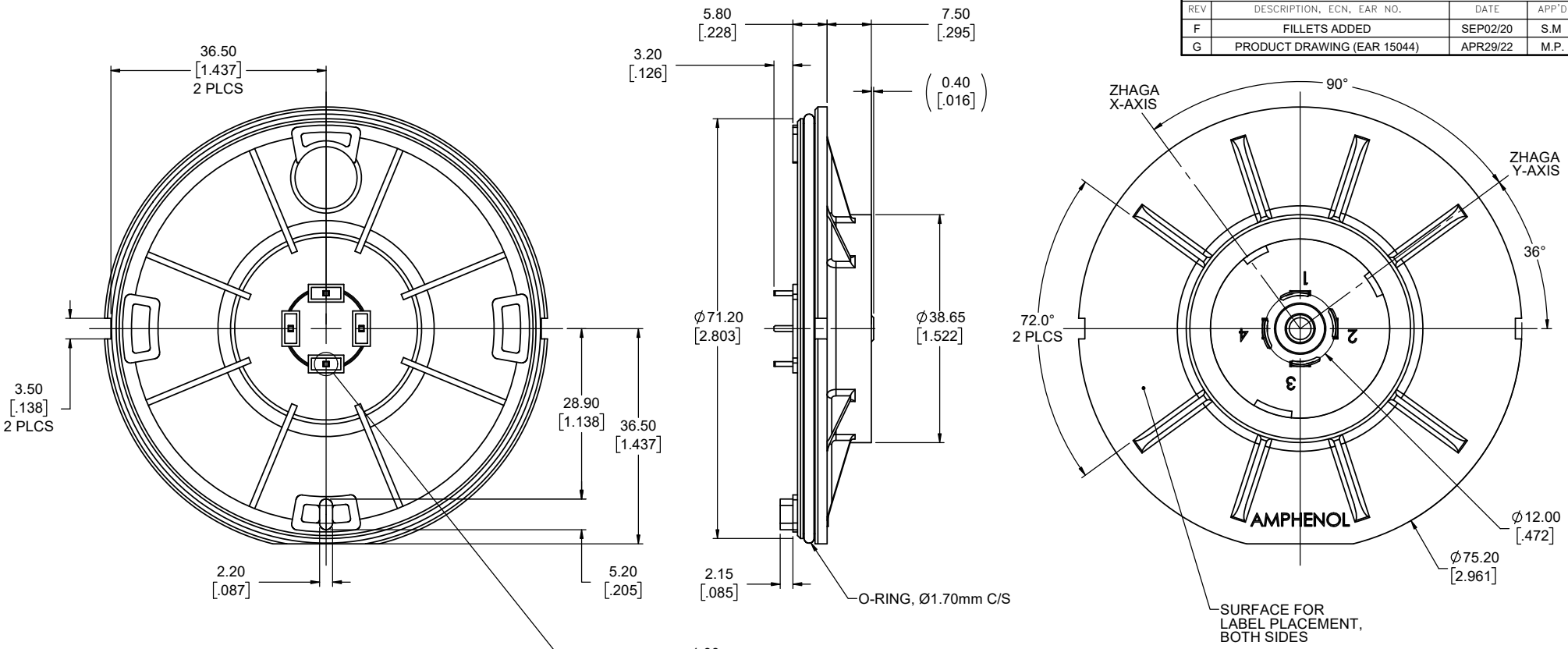

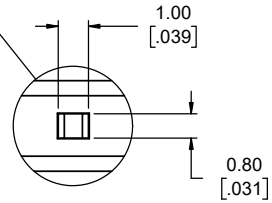

DETAIL A
4 PLCS
SCALE 8 : 1

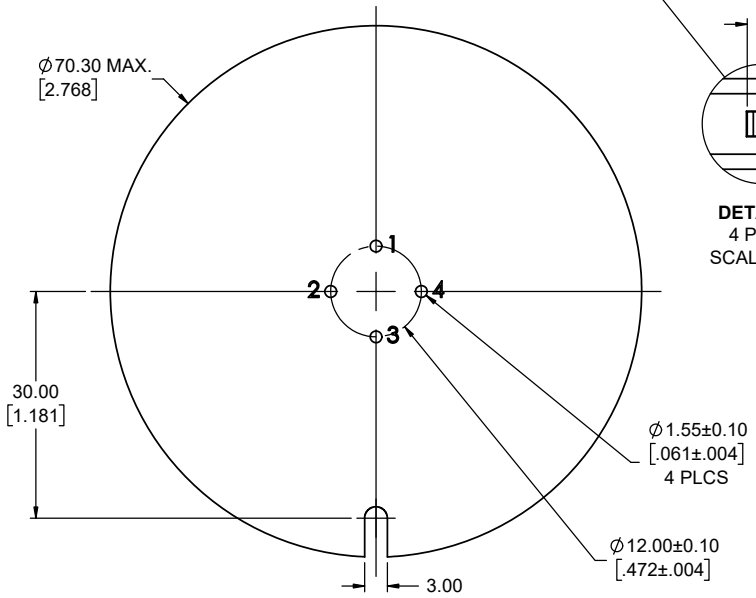

RECOMMENDED PCB LAYOUT
TOP SURFACE SHOWN

NOTES:

1. MATERIALS: ALL MATERIALS ARE RoHS COMPLIANT PER EU DIRECTIVE 2011/65/EU & AMENDMENTS.
   - MODULE HOUSING: PBT, COLOUR: BLACK. FLAMMABILITY RATING: UL94 V-0.
   - CONTACTS: COPPER ALLOY, FINISH: MATTE TIN OVER NICKEL.
   - O-RING: SILICONE RUBBER, COLOUR: BLACK. FLAMMABILITY RATING: UL94 V-0.

CONTACT NO.	CONTACT ASSIGNMENT
1	+24 V AUX POWER SUPPLY
2	i. DA- (NEGATIVE POLE FOR DALI PROTOCOL AND POWER) ii. GROUND FOR 24 V AUX POWER SUPPLY
3	DA+ (POSITIVE POLE FOR DALI PROTOCOL AND POWER)
4	NOT CONNECTED

AMPHENOL PART NUMBER: FLS-SB80-01

THIS DOCUMENT CONTAINS PROPRIETARY INFORMATION AND SUCH INFORMATION MAY NOT BE DISCLOSED TO OTHERS FOR ANY PURPOSE OR USED FOR MANUFACTURING PURPOSES WITHOUT WRITTEN PERMISSION FROM AMPHENOL CANADA CORP.

UNLESS SPECIFIED OTHERWISE	DRAWN	J.KONG	JUL25/18
PRIMARY UNITS MILLIMETERS	CHECKED	S.MUGAN	NOV27/18
SECONDARY INCHES	M.E. APP'D		
REFERENCE IN PARENTHESES	Q.A. APP'D		
GENERAL TOLERANCES	DWG APPR.		
1 DECIMAL PLACE	ENG. REL. NO.		
2 DECIMAL PLACES ±0.2	REF.		
3 DECIMAL PLACES	THIRD ANGLE PROJECTION	DO NOT SCALE DRAWING	
ANGULAR DEGREES ±2°			

Amphenol Canada Corp.
Commercial Products

FLS SERIES, LUMINAIRE EXTENSION MODULE, Ø80mm BASE, Ø1.70mm C/S O-RING, ZHAGA BOOK 18 COMPLIANT, RoHS COMPLIANT

DWG. NO. P-FLS-SB80-01 REV G

CODE ID NO. 03554 | DWG SIZE: X | SCALE: 2:1 | SHEET 1 OF 1