A1RFRD10

REVISION RECORD				
REV	ECO	DESCRIPTION	DRFT	CHKD
1		MODIFY DIMENSION	03/11/02' Chun	
2		ADD P/N	06/19/03' DFF	
3		ADD P/N	02/22/'05 PETERS	

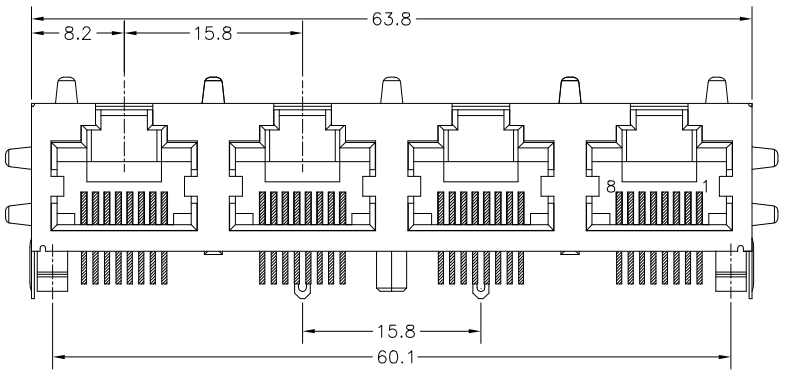

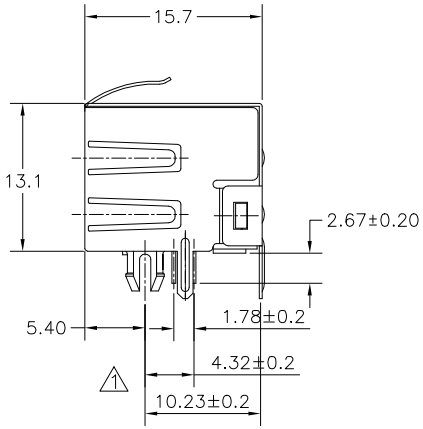

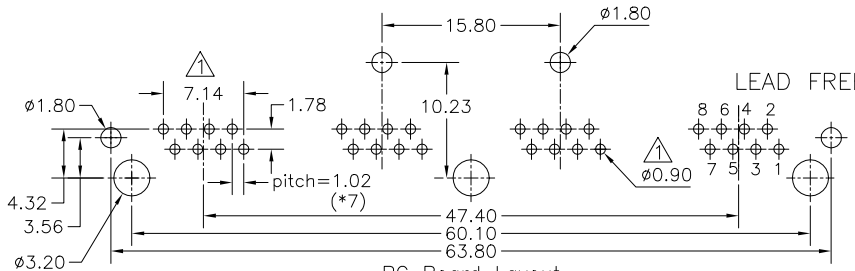

PC Board Layout
Component Side Shown
1 PCB t =1.60mm

LEAD FREE PART NUMBER: E5J88 – 6 X X X X X–L

1–NO TAB
2–TOP TABS.
3–SIDE TABS.
4–TOP TABS & SIDE TABS.

PLATING: 1–3u", 3–15u", 2–6u" 4–30u", 5–50u"

B–NI SHIELD STAMPED PIN.
F–NI SHIELD ROUND PIN(ø0.46).

0–W/O LOGO
3 J–W/O LOGO A05–0130

4–4 PORTS W/O MIDDLE POLE
2 C–4 PORTS W/ MIDDLE POLE

W/TIN PART NUMBER: E5J88 – 6 X X X X X

1–NO TAB
2–TOP TABS.
3–SIDE TABS.
4–TOP TABS & SIDE TABS.

PLATING: 1–3u", 3–15u", 2–6u" 4–30u", 5–50u"

B–NI SHIELD STAMPED PIN.
F–NI SHIELD ROUND PIN(ø0.46).

0–W/O LOGO
3 J–W/O LOGO A05–0130

4–4 PORTS W/O MIDDLE POLE
2 C–4 PORTS W/ MIDDLE POLE

NOTES:

ELECTRICAL:

1. VOLTAGE RATING : 125 VAC RMS.
2. CURRENT RATING : 1.5 AMP.
3. CONTACT RESISTANCE : 30 MILLIOHMS MAX.
4. INSULATION RESISTANCE: 1000 MEGOHMS MIN @ 500 VDC.
5. DIELECTRIC STRENGTH : 1000 VAC RMS 60Hz, 1MIN.
6. OPERATING: 750 CYCLES MIN.

MECHANICAL:

1. HOUSING MATERIAL : PBT+30%.G.F OR FR52 UL94V–0. COLOR–BLACK.
2. INSERT MATERIAL : PBT+30%GF OR FR52 UL94V–0. COLOR–BLACK.
3. BACK PLATE MATERIAL : PBT+30%GF. OR FR52 COLOR–BLACK.
4. SHIELD MATERIAL : COPPER ALLOY 0.25mm THICKNESS PLATING NI.
5. CONTACT MATERIAL : PHOSPHOR BRONZE 0.35mm THICKNESS OR ø0.46mm.
6. PLATING : GOLD PLATING OVER NICKEL.
7. PCB RETENTION PRE–SOLDER : 1 LB MIN.
8. PCB RETENTION POST–SOLDER: 10 LBS MIN.

ENVIRONMENTAL:

1. STORAGE : –40°C TO +85°C.
2. OPERATION: 0°C TO 70°C.

MATES WITH MODULAR PLUG CONFORMING TO
FCC PART 68, SUBPART F.
CUL FILE NO. E163191

MM (INCH)	DFTO Christ	DATE 8/27/2001'	FULL RISE ELECTRONIC CO., LTD
TOLERANCES EXCEPT AS NOTED	CHKD JAKE	DATE2005/2/24	
MM .0 ± 0.2 ± .00 ± 0.15 ± .000 ± 0.075 ±	MFO	DATE	TITLE
	APPVLLUSHENG	DATE2005/2/24	RJ45 W/O LED JACK 4 PORTS
ANGLES ±	MATERIAL :		DRAWING NO. GE5J3A18 / PART NO. SEE NOTE — SIZE A3 — REV 3
THIRD ANGLE PROJECTION	QT'Y :		
	FINISH :		
	SCALE :		DO NOT SCALE DRAWING — SHEET 1 OF 1

DETACHED LISTS