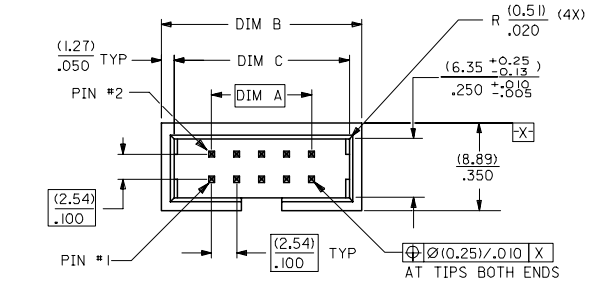

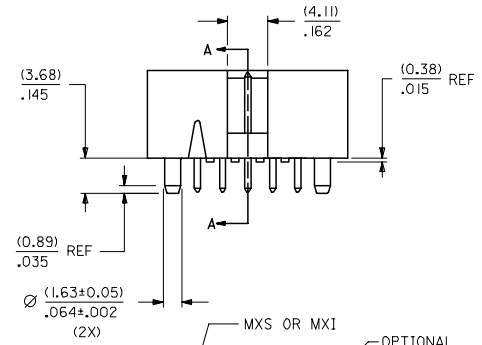

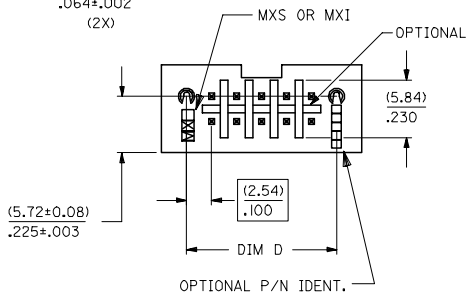

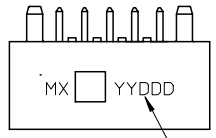

SEE NOTE 8

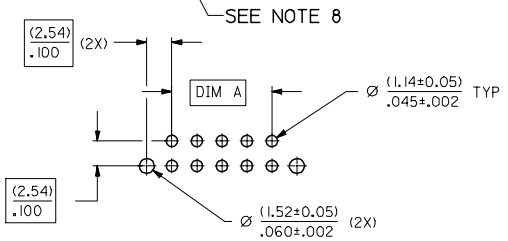

RECOMMENDED PCB PATTERN

PART NUMBER LEGEND

87256 - * * 11

CKT SIZES

ASSEMBLY P/N	CKT SIZE	DIM A	DIM B	DIM C	DIM D
87256-0411	04	(2.54)/.100	(12.70)/.500	(10.16)/.400	(7.62)/.300
87256-0611	06	(5.08)/.200	(15.24)/.600	(12.70)/.500	(10.16)/.400
87256-0811	08	(7.62)/.300	(17.78)/.700	(15.24)/.600	(12.70)/.500
87256-1011	10	(10.16)/.400	(20.32)/.800	(17.78)/.700	(15.24)/.600
87256-1211	12	(12.70)/.500	(22.86)/.900	(20.32)/.800	(17.78)/.700
87256-1411	14	(15.24)/.600	(25.40)/1.000	(22.86)/.900	(20.32)/.800
87256-1611	16	(17.78)/.700	(27.94)/1.100	(25.40)/1.000	(22.86)/.900
87256-1811	18	(20.32)/.800	(30.48)/1.200	(27.94)/1.100	(25.40)/1.000
87256-2011	20	(22.86)/.900	(33.02)/1.300	(30.48)/1.200	(27.94)/1.100
87256-2411	24	(27.94)/1.100	(38.10)/1.500	(35.56)/1.400	(33.02)/1.300
87256-2611	26	(30.48)/1.200	(40.64)/1.600	(38.10)/1.500	(35.56)/1.400
87256-3011	30	(35.56)/1.400	(45.72)/1.800	(43.18)/1.700	(40.64)/1.600
87256-3411	34	(40.64)/1.600	(50.80)/2.000	(48.26)/1.900	(45.72)/1.800
87256-4011	40	(48.26)/1.900	(58.42)/2.300	(55.88)/2.200	(53.34)/2.100
87256-4411	44	(53.34)/2.100	(63.50)/2.500	(60.96)/2.400	(58.42)/2.300
87256-5011	50	(60.96)/2.400	(71.12)/2.800	(68.58)/2.700	(66.04)/2.600
87256-5611	56	(68.58)/2.700	(78.74)/3.100	(76.20)/3.000	(73.66)/2.900
87256-6011	60	(73.66)/2.900	(83.82)/3.300	(81.28)/3.200	(78.74)/3.100
87256-6411	64	(78.74)/3.100	(88.90)/3.500	(86.36)/3.400	(83.82)/3.300
87256-7211	72	(88.90)/3.500	(99.06)/3.900	(96.52)/3.800	(93.98)/3.700

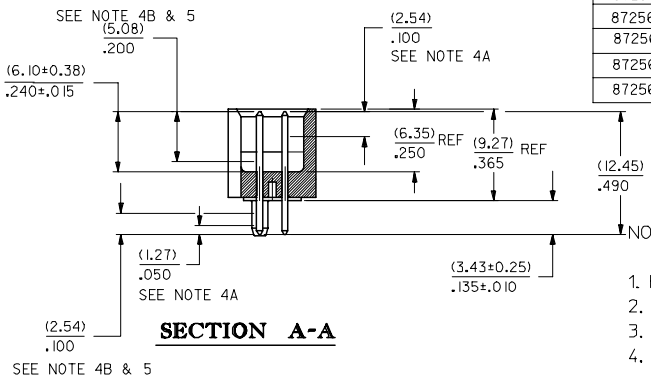

SECTION A-A

NOTES:

1. PIN PUSHOUT FORCE (0.9072 KG)/2 LBS MIN.
2. PRODUCT SPECIFICATION #70246 APPLIES.
3. WAFER TO BE FLAT WITHIN (0.03MM/CM)/.003IN/IN.
4. DIMENSIONS FOR PLATING LOCATIONS : A - MEASURE POINT FOR THICKNESS.
   B - MINIMUM COVERAGE.
5. GOLD END OF PIN UNLESS OVERALL PLATED.
6. FINISH : (PER ES-88)
   0.13um/5u" MIN GOLD FLASH OVER 1.02um/40u" MIN.PD/NI IN SELECTED AREA AND 2.5um/100u" MIN.TIN/LEAD IN SELECTED AREA OVER 1.27um/50u" MIN NICKEL OVERALL
7. FOR ILLUSTRATION PURPOSE A 10 CKT IS SHOWN.
8. OPTIONAL LOCATION FOR MANUFACTURER/YEAR/DAY MARKING IF REQUIRED BY CUSTOMER.

(MM)
INCH

HSG LASER MARKING
EC NO: S2005-0536
DRWN:YLQIAO 2005/01/26
CH'KD:PTLIM 2005/01/26
APPR:SCLOW 2005/01/27
DESCRIPTION
REV G1

QUALITY SYMBOLS
▼=0
(C)=0

GENERAL TOLERANCES (UNLESS SPECIFIED)

	mm	INCH
4 PLACES	± ---	± ---
3 PLACES	± ---	± .008
2 PLACES	± 0.20	± ---
1 PLACE	± ---	± ---
ANGULAR ± 3 °		

DRAFT WHERE APPLICABLE MUST REMAIN WITHIN DIMENSIONS

DIMENSION STYLE: IN/MM
SCALE: NTS
DESIGN UNITS: METRIC
THIRD ANGLE PROJECTION

DRAWN BY: OLKHO DATE: 1990/08/03
CHECKED BY: MLAI DATE: 1990/11/28
APPROVED BY: RWONG DATE: 1990/11/28

TITLE: C-GRID, SHROUDED WAFER SLOTTED, WITH IN-LINE POLARIZATION PEGS

molex MOLEX INCORPORATED

MATERIAL NO.: SEE TABLE
DOCUMENT NO.: SDA-87256-**11
SHEET NO.: 1 OF 1
SIZE: A3

THIS DRAWING CONTAINS INFORMATION THAT IS PROPRIETARY TO MOLEX INCORPORATED AND SHOULD NOT BE USED WITHOUT WRITTEN PERMISSION