NOTES:

1. MATERIALS AND FINISHES:
   BODY,HEX NUT & LOCK WASHER - BRASS, NICKEL PLATING
   CONTACT - BeCu, GOLD PLATING
   INSULATOR - NORYL

2. ELECTRICAL:
   A. IMPEDANCE: 75 OHM
   B. FREQUENCY RANGE: DC - 2 GHz
   C. DIELECTRIC WITHSTANDING VOLTAGE: 1500 VRMS, MIN.

3. MECHANICAL:
   A. DURABILITY: 500 CYCLES MIN.
   B. TEMPERATURE RANGE: -65° C TO +165° C

4. PACKAGING:
   A. QUANTITY: SINGLE PACK
   B. MARKING: BAG TO BE MARKED
   "AMPHENOL RF, 31-4803-75, AND DATE CODE"

THIRD ANGLE PROJ.

REVISIONS

REV	DESCRIPTION	DATE	ECO	APPR
A3	TITLE WAS CHANGED\ N/A	13-Feb-03	--	TONY
C	REDRAWN TO UPDATE FORMAT	23-Dec-08	47239	--
D	REDRAWN IN PRO-E	22-May-15	49810	MD

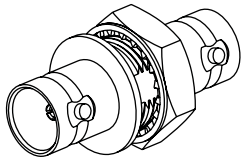

SCALE 1.500

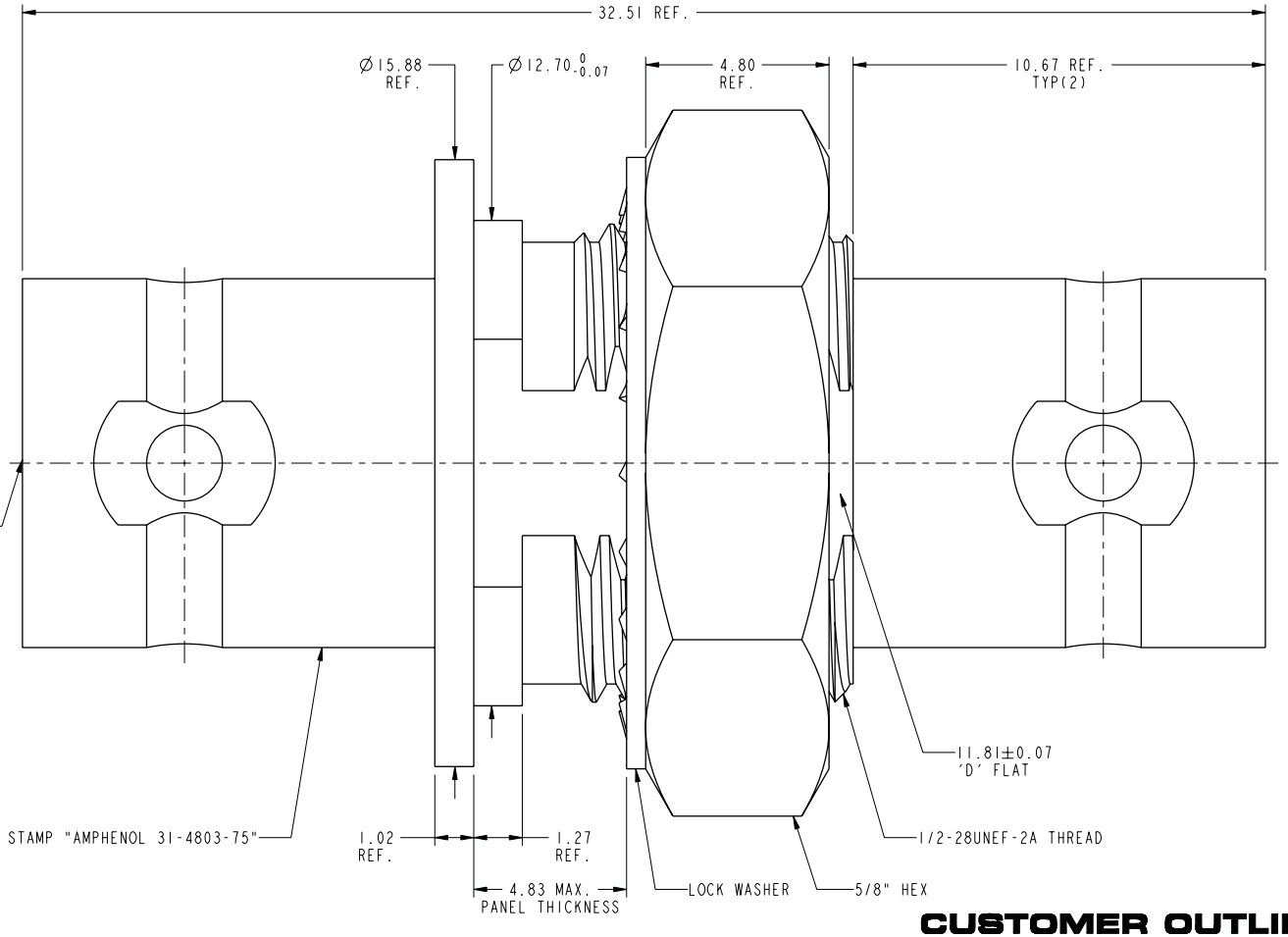

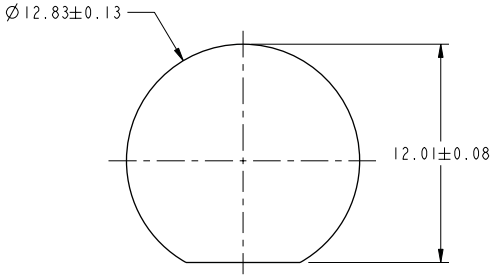

RECOMMENDED MOUNTING HOLE DIMENSIONS

CUSTOMER OUTLINE DRAWING

ALL OTHER SHEETS ARE FOR INTERNAL USE ONLY

UNLESS OTHERWISE SPECIFIED, DIMENSIONS ARE IN METRIC AND TOLERANCES ARE:

<0.5mm	0.5 - 6mm	6 - 30mm	30 - 120mm	ANGLES
± 0.05mm	±0.1mm	±0.2mm	± 0.3mm	±1°

NOTICE - These drawings, specifications, or other data (1) are, and remain the property of Amphenol corp. (2) must be returned upon request; and (3) are confidential and not to be disclosed to any person other than those to whom they are given by Amphenol Corp. the furnishing of these drawings, specifications, or other data by Amphenol Corp., or to any other person to anyone for any purpose is not to be regarded by implication or otherwise in any manner licensing, granting rights to permitting such holder or any other person to manufacture, use or sell any product, process or design, patented or otherwise, that may in any way be related to or disclosed by said drawings, specifications, or other data.

MATERIAL: SEE NOTES

REFERENCE: EAR #

CONFIGURATION LEVEL: In Work

FINISH

DRAWN M.DONG	DATE 14-May-15	
ENGINEER RICHER	DATE 14-Feb-03	
APPROVED S.HSIEH	DATE 18-May-15	
CAD FILE		

TITLE: BNC STR JACK TO JACK BHD ISOLATED ADAPTER

SCALE: 7.5:1.0 | SHEET 2 OF 2

DWG SIZE: B | REV: D

Amphenol RF
www.amphenolrf.com

DRAWING NO. 31-4803-75
ITEM NO. 31-4803-75
PART NO. 31-4803-75