BS,C ,202261,003	D

GEN. ST.	01	02	03	04	05	06	07	08	0D	50	60	70	80	90
INT. ST.	10 11 12 13 14 18 20	31 32 33 34	38 39 40 42 43	44 45 46 48	56 70 72 73 75	76 81 82	83 84 88							

REV.	DATE	DESCRIPTION	BY	C'K'D'
A	2001-09-14	CONVERSION REVISION 03	KN	
B	2005-10-26	105-0205	ALEX B	BKP
C	2006-08-08	106-0144	ALEX B	BKP
D	2009-06-03	109-0094	GEORGE	ALEX

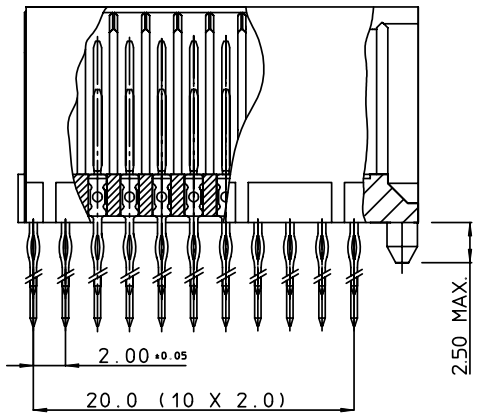

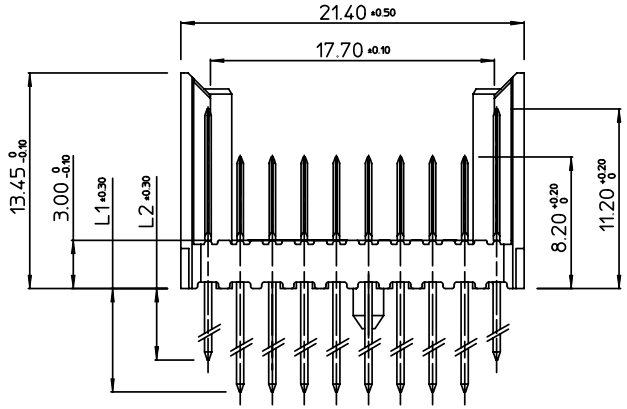

PERFORMANCE CHARACTERISTICS

CURRENT RATING : 1,5 A AT 20°C (FULLY LOADED)
1 A AT 70°C (FULLY LOADED)
RATED VOLTAGE : 500 V AC (CONT / CONT)
OPERATING TEMPERATURE : -55°C TO 125°C
CONTACT RESISTANCE : 20 mΩ MAX
INSERTION FORCE : 0.60 N MAX / CONT
EXTRACTION FORCE : 0.15 N MIN / CONT
INSULATION RESISTANCE : 10^4 MΩ MIN

CAT. NR.	L1 ±0.3	L2 ±0.3	DESCRIPTION
HM2P89PD8111----	3.7	3.7	SHORT PRESS-FIT
HM2P89PC8111----	4.5	4.5	SHORT PRESS-FIT
HM2P89PK8111----	13	4.5	REAR PLUG-UP: LEVEL 1
HM2P89PM8111----	14.5	4.5	REAR PLUG-UP: LEVEL 2
HM2P89PN8111----	16	4.5	REAR PLUG-UP: LEVEL 3
HM2P89PT8111----	13	4.5	WIRE WRAP

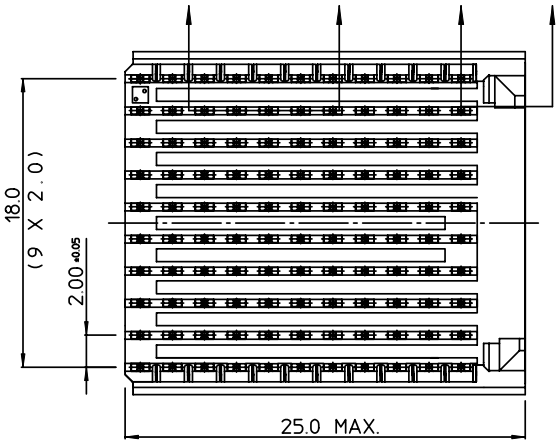

NOTES

1. "HM2P89P#5111□□□□"
   - PERFORMANCE LEVEL INDICATOR (REFER DWG No. BS,C ,201844,003)
   - LEAD FREE INDICATOR : LF=LEAD FREE (DIGIT 15&16)
2. THIS PRODUCT IS CSA APPROVED.
   THIS PRODUCT IS UL RECOGNIZED.
3. FOR RECOMMENDED PTH DIMENSIONS REFER DRAWING : BS,A ,201572,001
4. THE PRODUCT (LF) MEETS EUROPEAN UNION DIRECTIVES AND OTHER COUNTRY REGULATIONS AS DESCRIBED IN GS-22-008

LAY-OUT
P.C.B.- HOLE

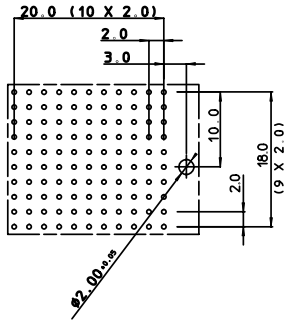

THIS IS OUR EXCLUSIVE PROPERTY. IT IS NOT TO BE COPIED, REPRINTED OR DISCLOSED TO A THIRD PARTY, NOR USED FOR MANUFACTURING WITHOUT OUR WRITTEN CONSENT, AND HAS TO BE RETURNED TO US IN CASE OF NO USAGE

DIT IS ONZE EIGENDOM EN MAG NOCH NAGEMAAKT, HERDRUKT, OVERGEMAAKT AAN DERDEN, NOCH VOOR FABRIKATIE GEBRUIKT WORDEN, ZONDER ONZE SCHRIFTELIJKE TOELATING. BIJ NIET GEBRUIK IS TERUGZENDING VERPLICHT.

MALE SIGNAL STRAIGHT PRESS-FIT-TO-BOARD CONNECTOR
EXTENSION MODULE (WIDE BODY)

1DEC ±0,2
2DEC ±0,1
ANGLES ±1°

APPR.	DATE	SIGN.
DRAFT	1996-04-30	W.Panis
CHECKED		
PROD. MGR.		
PR.ENG.MGR.		
PR.MGT.MGR.		

REFERENCES

WE RESERVE THE RIGHT TO CHANGE DIMENSIONS OR REQUIREMENTS WITHOUT PRIOR NOTICE.

ALL DIMENSIONS IN MM

MILLIPACS 2 / TYPE F (8 ROW) / SHIELDED

CAT. No. HM2P89P#8111----

FCI www.fciconnect.com

SCALE 3/1

BS,C ,202261,003 D
DRAWING No. CUSTOMER DRAWING REVISION

PDM: Rev:D STATUS: Released Printed: Nov 19, 2010