MICRO SWITCH
A DIVISION OF MINNEAPOLIS-HONEYWELL REGULATOR COMPANY
FREEPORT, ILLINOIS
FED. MFR. CODE 91929

SWITCH UNITS (SERIES 2)

CATALOG LISTING
2D72

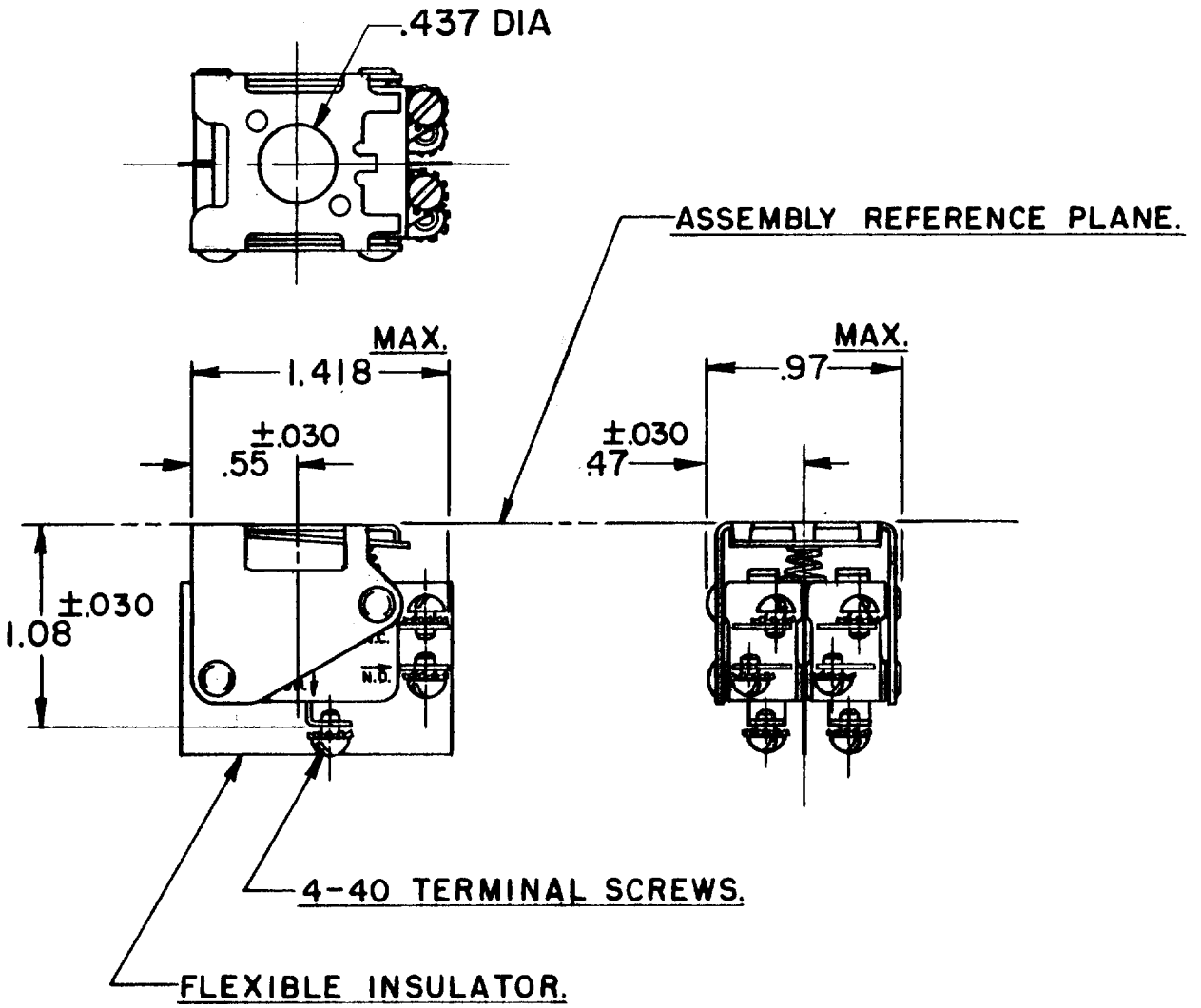

THIS DRAWING COVERS A PROPRIETARY ITEM AND IS THE PROPERTY OF MICRO SWITCH, A DIVISION OF MINNEAPOLIS-HONEYWELL REGULATOR CO. THIS DRAWING IS NOT TO BE COPIED OR USED WITHOUT THE APPROVAL OF MICRO SWITCH.

CHARACTERISTICS

ELECTRICAL DATA

CONTACT ARRANGEMENT	BREAK DISTANCE
(2) S P D T	.040 APPROX.

L156 11A 1/3HP 125, 250 OR 277 VAC
1/2A 125 VDC, 1/4A 250 VDC
4A 125 VAC "L"

SCALE FULL
DO NOT SCALE PRINT

UNLESS OTHERWISE SPECIFIED
DIMENSIONS ARE IN INCHES
TOLERANCES ARE:

ONE PLACE	(.0)	±.030
TWO PLACE	(.00)	±.015
THREE PLACE	(.000)	±.005
ANGLES		±

WEIGHT

DRAWN	R L H	24 APRIL 59
CHECK		
CHECK	R L B	28 JUL 59
CHECK		

REVISIONS

A	C038253	C J H 24 FEB 77
B	C092091	MAM 1 OCT 97

REPLACES
RELEASE NO. CO 13769
DRAWING NUMBER M 2D72
ISSUE X Z 3

FO-5037B