87 610 050 SERIES

TOTALIZING COUNTER

- **Voltage Input Version**
- **8 Digit .3″ High LCD Display**
- **NEMA 4 Front Panel**
- **Screw Terminal**
- **Custom CMOS Technology**

GENERAL FEATURES:

The 87 601 050 Series is a totalizing counter housed in a DIN-sized (24 x 48mm) enclosure. Count input and reset input can be a 5 to 50 VAC/DC and 48 to 240 VAC voltage pulse. The unit is powered by an internal lithium battery which can be disconnected via a dip-switch for storage purposes.

WIRING:

87 610 050

1 - 48 to 240 VAC Reset Input
2 - OV Reset Input
3 - 5 to 50 VAC/DC Reset Input
4 - 5 to 50 VAC/DC Count Input
5 - OV Count Input
6 - 48 to 240 VAC Count Input

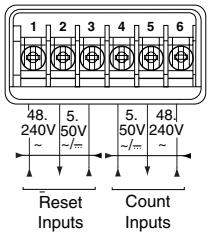

SPECIFICATIONS:

Display	8 Digit LCD	
Display Height	0.3″	
Input		
Count/Reset Inputs	Voltage Pulse	5 to 50 VAC/DC 48 to 240 VAC
Input Speed	40 Hz	
Min. low level time	12 ms	
Min. high level time	12 ms	
Power Supply	Internal lithium battery (8 year life)	
Connection	Screw Terminals	
Front Panel Rating	NEMA 4 (IP66)	
Operating Temperature	+14°F to 122°F (-10 to 50°C)	
Storage Temperature	-13°F to 158°F (-25 to 70°C)	
Weight	2.1 oz. (60g)	

DIMENSIONS: (mm)

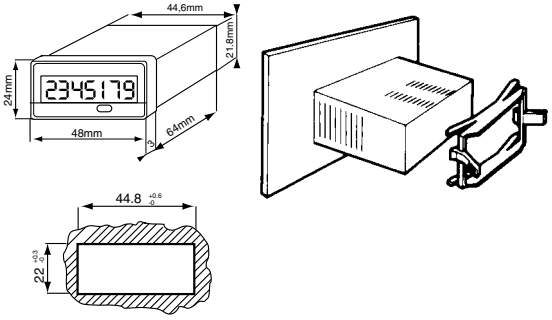

ORDERING INFORMATION:

Voltage Input Version 87 610 050

7

Products and specifications subject to change without notice.
Consult factory for application assistance.