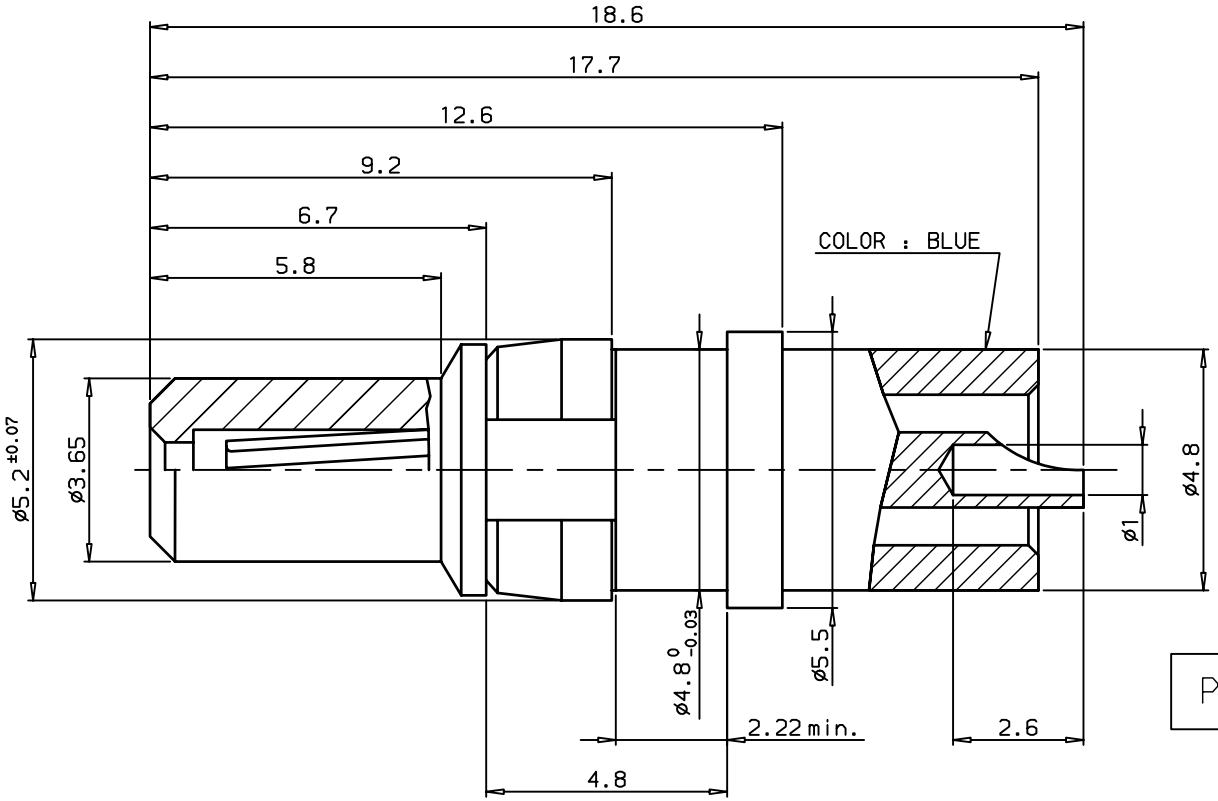

MATERIAL and Plating
Body:blue PTFE
Center contact:phosphor bronze gold plated
extraction force>0.20 N with gauge 0.99
Clip:beryllium,nickel pated
ELECTRICAL DATA
Contact resistance:<3mΩ
Contact current:1.5A
Test voltage:3800V rms
Working voltage:2800V rms
MECHANICAL DATA:> 100
TEMPERATURE RANGE:-55°C to +125°C
PACKAGING:per 100 pieces

PART NUMBER	86382000LF

IND	DESIGNATION
C	ADD CHARACTERISTICS AND SHOW INNER CONTACT

rev	ecn no	dr	date
A	LS06-0022	MPE	2006/03/11
B	LS06-0095	LGO	2006/07/19
C	LS07-0287	MPE	2007/11/09
-	-	-	-
-	-	-	-
-	-	-	-
-	-	-	-

European Views

www.fciconnect.com

surface ISO 1302 | tolerance std ISO 406 ISO 1101 | projection | mm

TOLERANCES UNLESS OTHERWISE SPECIFIED

Dr	M.PESSON	2006/03/11	ANGULAR	LINEAR	0.X	±0.1
Eng	M.PESSON	2006/03/11			0.XX	±0.1
Chr	LEGARRE	2006/03/11	0.XX°	±2°	0.XXX	±0.1
Appr	LEGARRE	2006/03/11	Product family			D-SUB

size A3 | Scale 10 | ECN LS07-0287 | Spec ref -

title HIGH VOLTAGE CONTACT MALE

dwg no C01-8638-0359 | Rev. C

catalog no - | CUSTOMER | sheet 1 of 1

REV F - 2006-04-17

Copyright FCI.

PDM: Rev:C Rev :C STATUS: Released Printed: Dec 13, 2012 Printed: Mar 25 2022