ITEM NO.	PART NUMBER	DESCRIPTION	QTY.	NOTES
1	50-00056	Connector, dc plug, 3.5x1.35xL20mm, molding style, spring contacts, black insulator	1	
2	30-00003	Wire, 2C BC, 24 AWG, UL2468, 300V, 80C, 3.6 mm, VW-1, PVC, 76A	1	
3	24-00002	Overmold, PVC, black	1	

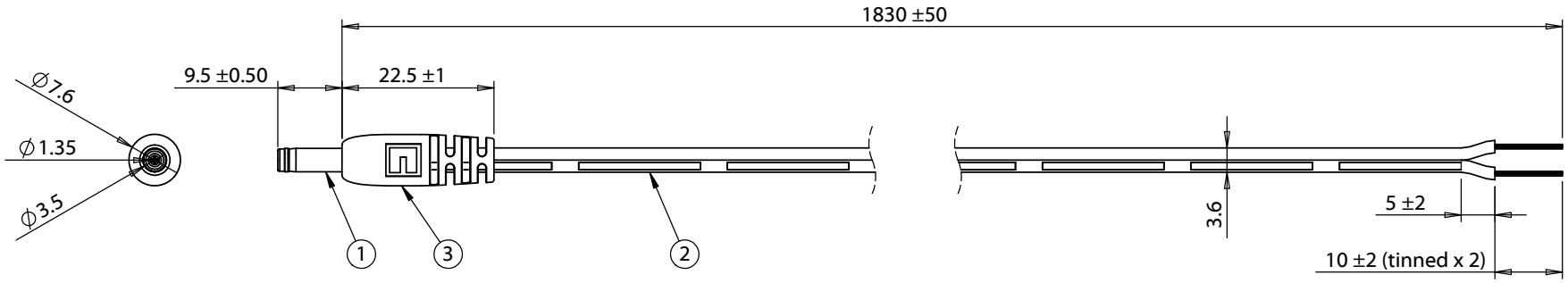

Wiring diagram	
50-00056	Wire Color
Center	Black with stripe
Sleeve	Black

REVISION	DATE	DESCRIPTION
A	6/28/2012	Initial release

PREPARED: GL 2016.01.06 14:53:29 -08'00'

VERIFIED: AG 2016.01.19 11:13:19 -08'00'

DIMENSIONS ARE IN MILLIMETERS

TOLERANCES:
X: ± 0.5 mm
X.X: ± 0.3 mm
X.XX: ± 0.05 mm

NOTES

RoHS compliant

Function test: no open, no reversed polarity, no short circuit, no INT

4 A, 12 Vdc

Functionally equivalent components may be used

DESCRIPTION:
Cable, 1830 mm, 3.5x1.35x9.5 mm 50-00056 dc plug to stripped tinned, 24 AWG, 30-00003 wire

TENSILITY

20802 Sockeye Place #130
Bend, OR 97701 USA
tel 541.323.3228 *fax* 541.323.4202
800 877.670.7118 www.tensility.com

SIZE	PART NUMBER
A	10-01070

SCALE: 1:1	WEIGHT:	SHEET 1 OF 1

5 4 3 2 1