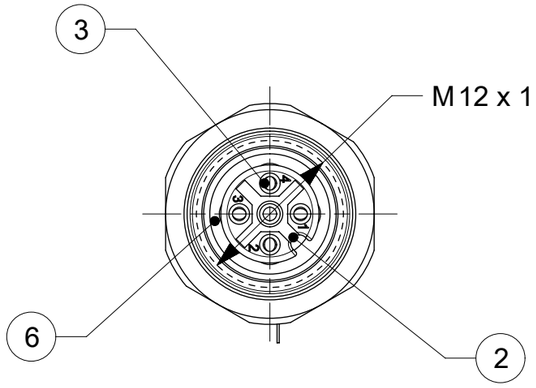

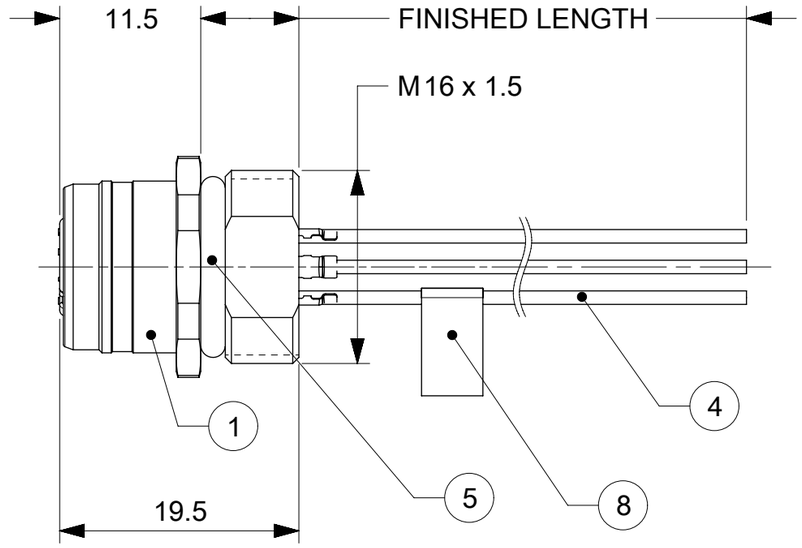

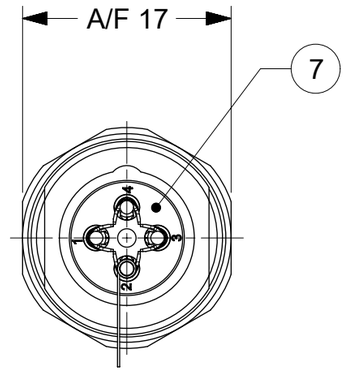

Panel Cutout:

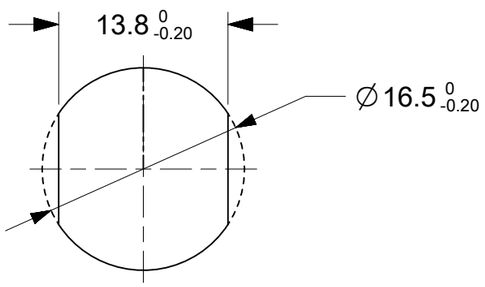

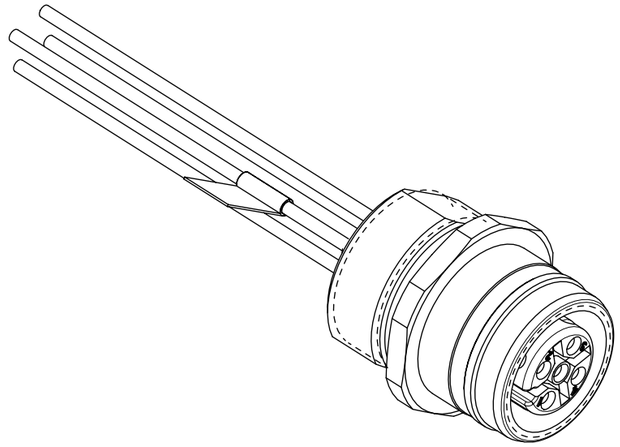

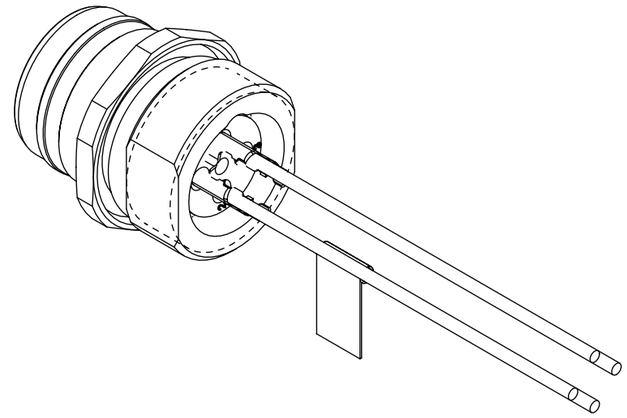

NOTE :

1. POS. 8 LABEL - ON WHITE WIRE FOR 4 POL. VERSIONS
   - ON GREEN/YELLOW OR GREY WIRE FOR 5 AND 8 POL, VERSIONS
   - NO LABEL FOR 12 POL. VERSIONS

BILL OF MATERIAL

ITEM	COMPONENT	MATERIAL	FINISH
1	REC SHELL	BRASS	NICKEL PLATED
2	INSERT	PUR	BLACK
3	CONTACT	BRASS /GOLD	CuZn Ni/Au
4	WIRES	COPPER/PVC	NONE
5	O-RING	NBR	BLACK
6	O-RING	VITON	RED
7	POTTING MATERIAL	WEVO	NONE
8	LABEL	-	YELLOW

DOCUMENT STATUS	P1	RELEASE DATE	2022/07/22 12:02:27

THIS DRAWING CONTAINS INFORMATION THAT IS PROPRIETARY TO MOLEX ELECTRONIC TECHNOLOGIES, LLC AND SHOULD NOT BE USED WITHOUT WRITTEN PERMISSION

SYMBOLS: E/A = 0; E/C = 0; E/F = 0; S = 0; ▼ = 0; C = 0; ☒ = 0; ■ = 0; ▽ = 0

DIMENSION UNITS	SCALE
mm	2:1

GENERAL TOLERANCES (UNLESS SPECIFIED)

ANGULAR TOL	±	1.0 °
4 PLACES	±	
3 PLACES	±	
2 PLACES	±	0.05
1 PLACE	±	0.3
0 PLACES	±	0.5

DRAFT WHERE APPLICABLE MUST REMAIN WITHIN DIMENSIONS

CURRENT REV DESC: NEW P/N ADDED

EC NO: 714426

DRWN:	RSILLER	2022/07/15
CHK'D:	THAERDT	2022/07/22
APPR:	THAERDT	2022/07/22

INITIAL REVISION:

DRWN:	SSM	2017/09/26
APPR:	RSILLER	2017/12/15

THIRD ANGLE PROJECTION | DRAWING: A3-SIZE | SERIES: 120084

molex

REC U12 XP AC FE XM M16 FM WIR BRA AU

PRODUCT CUSTOMER DRAWING

DOCUMENT NUMBER	DOC TYPE	DOC PART	REVISION
1200845107	PSD	000	A6

MATERIAL NUMBER	CUSTOMER	SHEET NUMBER
SEE SHEET 3	GENERAL MARKET	1 OF 3

FORMAT: master-Sheet-A3
REVISION: H
DATE: 2018/01/15

4 POLE VERSIONS

PIN	WIRE COLOR
1	BROWN
2	WHITE
3	BLUE
4	BLACK

5 POLE VERSIONS

PIN	WIRE COLOR
1	BROWN
2	WHITE
3	BLUE
4	BLACK
5	GREEN/YELLOW OR GREY

8 POLE VERSIONS

PIN	WIRE COLOR
1	WHITE
2	BROWN
3	GREEN
4	YELLOW
5	GREY
6	PINK
7	BLUE
8	RED

12 POLE VERSIONS

PIN	WIRE COLOR
1	WHITE
2	BROWN
3	GREEN
4	YELLOW
5	GREY
6	PINK
7	BLUE
8	RED
9	BLACK
10	VIOLET
11	GRAY/PINK
12	RED/BLUE

TABLE 3

POLES	4 POLE	5 POLE	8 POLE	12 POLE
LAYOUT	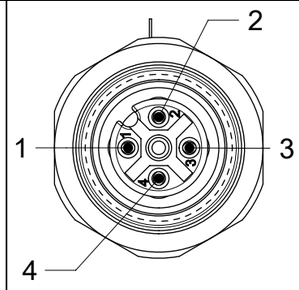	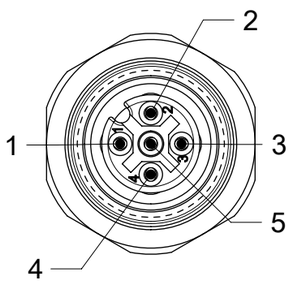	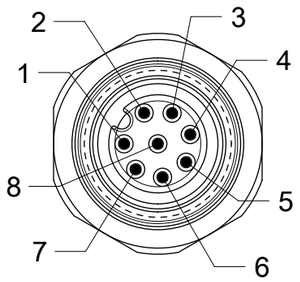	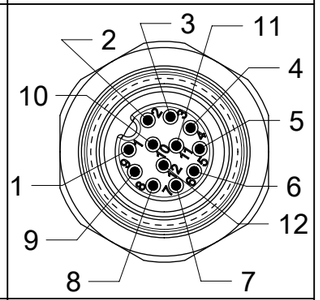
VOLTAGE RATING	250V	60V	30V	30V
CODING	A - Code	A - Code	A - Code	A - Code
AMPERE RATING	4A	4A	2A	1.5A
PROTECTION CLASS CONNECTOR INTERFACE SHELL TO ENCLOSURE	IP 67/69K (in mated condition / when properly installed)			
OPERATING TEMP.	-25°C / 85°C			
CSA CERTIFICATION	FILE NO. LR6837			
WIRE LEAD	0.34 mm² PVC	0.34 mm² PVC	0.25 mm² PVC	0.14 mm² PVC
PIN DIAMETER	1.0 mm	1.0 mm	0.8 mm	0.6 mm
WIRE COLOR	ACCORDING TO IEC 60947-5-2		ACCORDING TO DIN 47100	

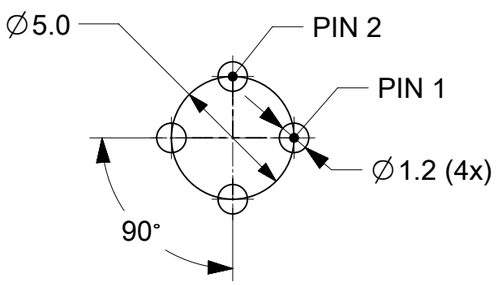

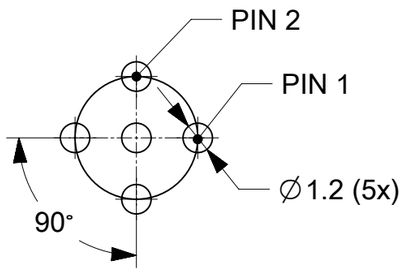

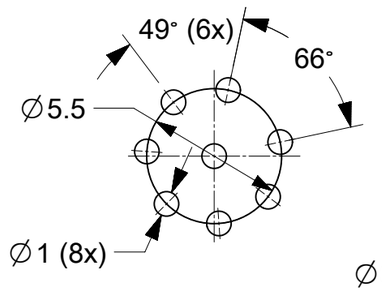

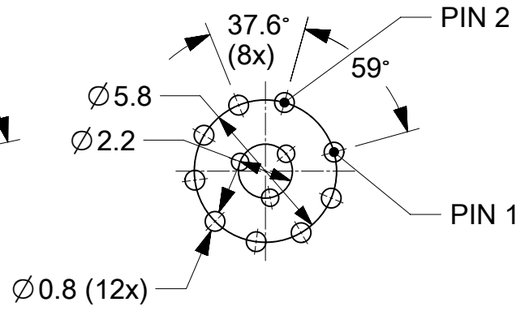

DRILL LAYOUT BACKSIDE

SYMBOLS	
E = 0	
E = 0	
E = 0	
S = 0	
▼ = 0	
C = 0	
☒ = 0	
■ = 0	
V = 0	

THIS DRAWING CONTAINS INFORMATION THAT IS PROPRIETARY TO MOLEX ELECTRONIC TECHNOLOGIES, LLC AND SHOULD NOT BE USED WITHOUT WRITTEN PERMISSION

DIMENSION UNITS	SCALE
mm	2:1

GENERAL TOLERANCES (UNLESS SPECIFIED)

ANGULAR TOL	±	1.0 °
4 PLACES	±	
3 PLACES	±	
2 PLACES	±	0.05
1 PLACE	±	0.3
0 PLACES	±	0.5

DRAFT WHERE APPLICABLE MUST REMAIN WITHIN DIMENSIONS

CURRENT REV DESC: NEW P/N ADDED

EC NO: 714426
DRWN: RSILLER 2022/07/15
CHK'D: THAERDT 2022/07/22
APPR: THAERDT 2022/07/22

INITIAL REVISION:
DRWN: SSM 2017/09/26
APPR: RSILLER 2017/12/15

THIRD ANGLE PROJECTION | DRAWING: A3-SIZE | SERIES: 120084

molex

REC U12 XP AC FE XM M16 FM WIR BRA AU

PRODUCT CUSTOMER DRAWING

DOCUMENT NUMBER	DOC TYPE	DOC PART	REVISION
1200845107	PSD	000	A6

MATERIAL NUMBER	CUSTOMER	SHEET NUMBER
SEE SHEET 3	GENERAL MARKET	2 OF 3

DOCUMENT STATUS	P1	RELEASE DATE	2022/07/22 12:02:27

FORMAT: master_landscape-A3
REVISION: H
DATE: 2018/01/16

PART LIST

4 POLE VERSIONS

MOLEX P/N	ENGINEERING NR.	L [mm]	TOL
1200845107	WR4U20E03C3003	300	±10
1200250006	WR4U20E03C300	300	±10
1200848085	WR4U20E03C500	500	±10
1200848242	WR4U20E03M0203	2000	±10

5 POLE VERSIONS

MOLEX P/N	ENGINEERING NR.	L [mm]	TOL	PIN 5
1200845113	WR5U20E03C3003	300	±10	GN/YE
1200848027	WR5U20E03C500	500	±10	GN/YE
1200848037	WR5U20E03M020	2000	±10	GREY
1200848124	WR5U20E03M010	1000	±10	GN/YE

8 POLE VERSIONS

MOLEX P/N	ENGINEERING NR.	L [mm]	TOL
1200845002	WR8U20E02M010	1000	±10
1200845095	WR8U20E02C300	300	±10

12 POLE VERSIONS

MOLEX P/N	ENGINEERING NR.	L [mm]	TOL
1200845012	WRCU20E01C200	200	±10
1200845013	WRCU20E01C300	300	±10

THIS DRAWING CONTAINS INFORMATION THAT IS PROPRIETARY TO MOLEX ELECTRONIC TECHNOLOGIES, LLC AND SHOULD NOT BE USED WITHOUT WRITTEN PERMISSION

SYMBOLS: = 0 / = 0 / = 0 / = 0 / = 0 / = 0 / = 0 / = 0 / = 0

DIMENSION UNITS: mm — SCALE: 1:1

GENERAL TOLERANCES (UNLESS SPECIFIED)

ANGULAR TOL	±	1.0 °
4 PLACES	±	
3 PLACES	±	
2 PLACES	±	0.05
1 PLACE	±	0.3
0 PLACES	±	0.5

DRAFT WHERE APPLICABLE MUST REMAIN WITHIN DIMENSIONS

CURRENT REV DESC: NEW P/N ADDED

EC NO: 714426
DRWN: RSILLER 2022/07/15
CHK'D: THAERDT 2022/07/22
APPR: THAERDT 2022/07/22

INITIAL REVISION:
DRWN: SSM 2017/09/26
APPR: RSILLER 2017/12/15

THIRD ANGLE PROJECTION | DRAWING: A3-SIZE | SERIES: 120084

molex

REC U12 XP AC FE XM M16 FM WIR BRA AU

PRODUCT CUSTOMER DRAWING

DOCUMENT NUMBER	DOC TYPE	DOC PART	REVISION
1200845107	PSD	000	A6

MATERIAL NUMBER	CUSTOMER	SHEET NUMBER
SEE PART LIST	GENERAL MARKET	3 OF 3

DOCUMENT STATUS	P1	RELEASE DATE	2022/07/22 12:02:27

FORMAT: master_Sized-A3
REVISION: H
DATE: 2018/01/18