6 POSITIONS OF 4U RAILS

(FOR REFERENCE DIMENSIONS ONLY)

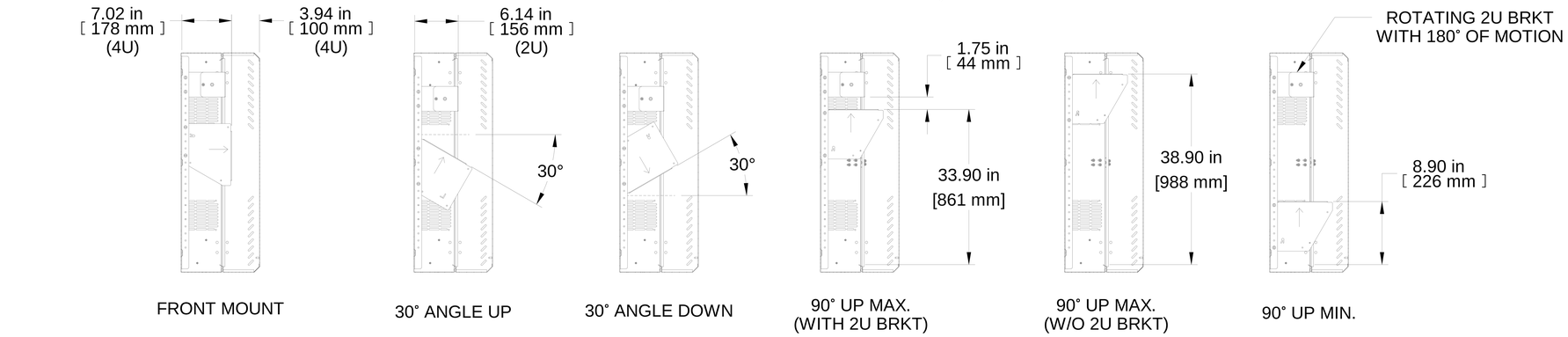

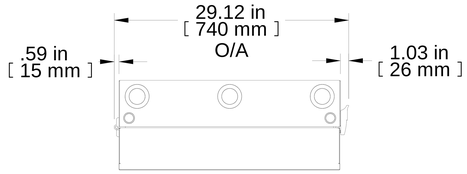

TOP VIEW

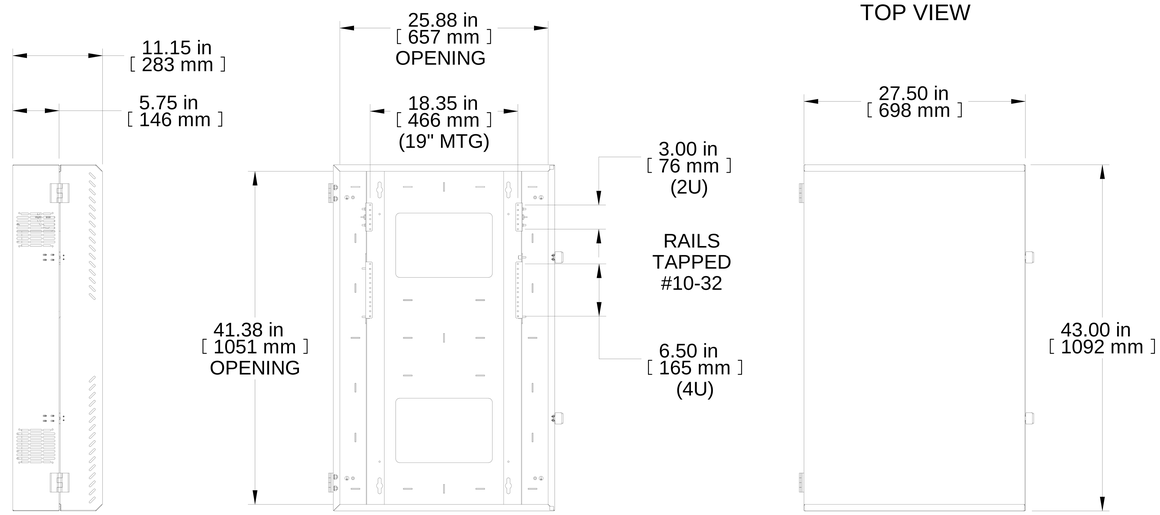

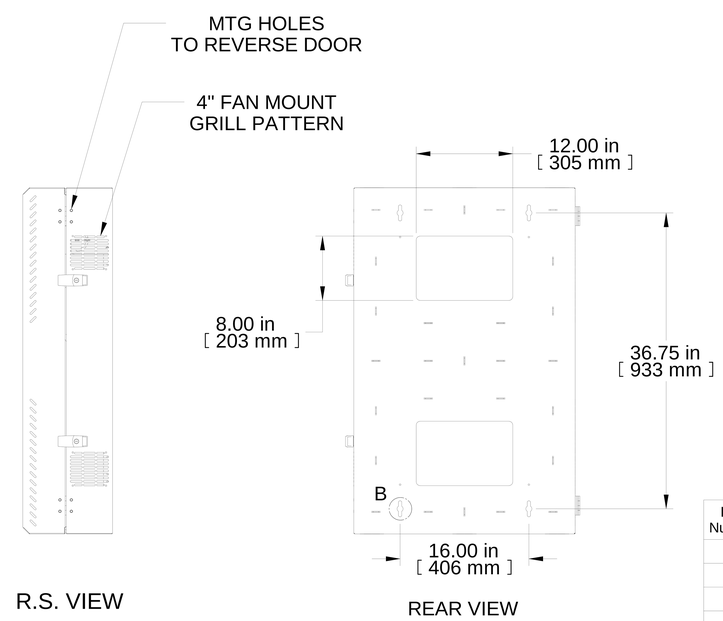

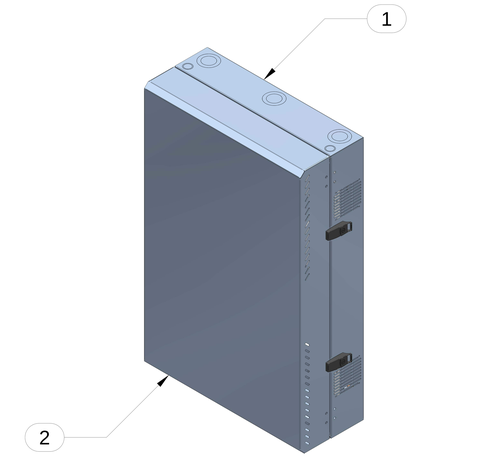

ISOMETRIC

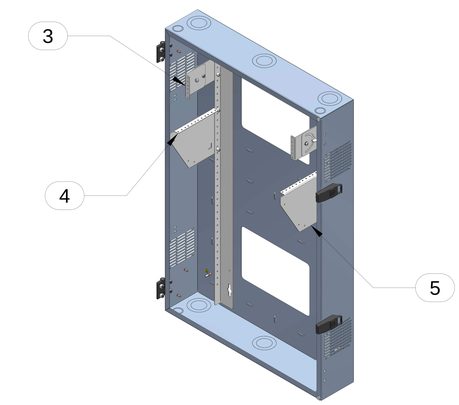

ISOMETRIC
(DOOR REMOVED)

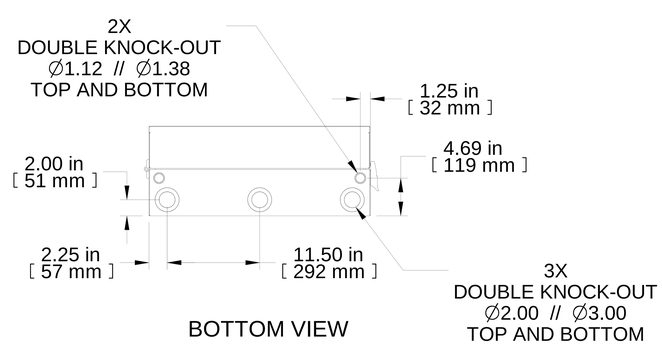

BOTTOM VIEW

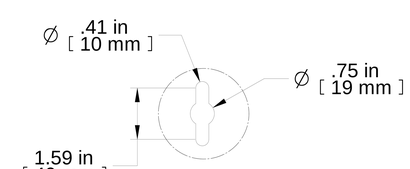

DETAIL B

Item Number	Title	Quantity
1	HLP - REAR SECTION 43H/4UDP	1
2	HLP - DOOR ASSEMBLY (43H)	1
3	HLP - ROTATING 2U BRKT ASSEMBLY	2
4	HLP - FIXED RAIL LH 90/30 (4U)	1
5	HLP - FIXED RAIL RH 90/30 (4U)	1

PART NUMBERS

HLP4U43LG	PAINTED LIGHT GREY TEXTURED

NOTES

Mounting Rails Painted White

Wall Mounting Hardware Not Included

See Hammond Website for More Information

Français

Pour tous les détails sur nos produits,
svp veuillez consulter notre site www.hammondmfg.com

Data subject to change without notice. Isometric drawing not to scale.
Les données sont sujettes à changement sans préavis.

HAMMOND MANUFACTURING®

www.hammondmfg.com

PART NO. **HLP4U43LG**